INSTRUCTIONS FOR USE

Rultract, Inc.

5663 Brecksville Rd. Cleveland, Ohio 44131-1593 U.S.A.
PH:(888) 550-5695
E-Mail: rultract@rultract.com Website: www.rultract.com

Caution: Federal Law (USA) restricts this device to sale by or on the order of a physician.

Important

The Rultract® Skyhook Retractor is to be used according to the instructions for use. All personnel who handle Rultract® device must read these instructions prior to use of the instrument.

DEVICE DESCRIPTION

The Rultract® Skyhook Retractor is a manual surgical instrument system intended for use in surgery under sterile conditions. The Rultract® Skyhook Retractor System is designed as an omni-positioning retractor instrument to elevate, position, and stabilize surgical sites and tissue, and provide optimal surgical exposure and stability. The wide selection of base (table) arms and clamps, cross-member components, and propriety Rultract Skyhook Retractor assembly, make the Rultract product line suitable for any surgical specialty and application.

INTENDED USE

The Rultract® Skyhook Retractor assembly is a manual surgical instrument intended for use in surgery to facilitate access to surgical sites under sterile conditions by the direction of the surgeon.

CONTRAINDICATIONS

There are no known contraindications to Rultract® Skyhook Retractors.

Rultract FDA Information

FDA Establishment:
RULTRACT INC
5663 Brecksville Road
Independence , OH 44131
Registration #: 1530504
FEI Number*: 3000717741
Owner Operator # 10060024
Listing # D345513

SKYHOOK
Surgical Retractor Systems

Rultract, Inc. 5663 Brecksville Rd.
Cleveland, Ohio 44131 U.S.A.

INDEX	Page
Table of Contents	02
Warnings Index Standards of Safe Use	03
Warnings Index Proper Servicing and Repair	04
Precautions Index	05
Operating Room IFU	06-09
Resternotomy Attachments OR IFU	10-11
O R Table Rail Mounted Clamp IFU	12-14
Top and Bottom Posts IFU	15-21
Extender Bar(s) IFU	22-24

INDEX	Page
SPD Inservice Introduction	25
Table of Contents	26
Cleaning Instructions & Biocompatibility	27
Disassemble Ratchet Rake for Cleaning Cycle	28-32
Cleaning Instructions / Identify System Components	33-38
Sterilization Guidelines	39-40
Prepare for Sterilization: Inspect all Fasteners	41-45
Reassemble for Sterilization and use	46-48
Cable Replacement	49-56
Accessories/Replacement Parts	57-58
Contact Information And Repairs	59
Standards of Safe Use Compliance	60
Service Request Form	61
Parts List	62
Warnings Index Proper Servicing and Repair	63

RULTRACT WARNINGS INDEX:

Standards of Safe Use Compliance

PROPER SERVICING AND REPAIR OF YOUR RULTRACT RETRACTOR SYSTEM

Rultract, Inc. is the ONLY authorized service center in the U.S.A. Contact Rultract at service@rultract.com or 888-550-5695 to schedule service/repair or with questions concerning routine maintenance and service.

SERVICE INTERVAL: Complete factory service of your Rultract Skyhook Retractor System: (including a cable change)

****If using a surgical device tracking system to track cases, i.e. Censitrac: 400 cases.**

****If not using a surgical device tracking system to track cases, i.e. Censitrac: Every 12-24 months dependent on frequency of use.**

WARNING: Cables worn or damaged through mishandling ***prior to the factory service interval***, must be replaced with a **new Rultract® cable**. Do not attempt to repair, cut, alter or modify the cable in any way. **Cutting and reattaching the cable will cause it to weaken and fray. This can result in failure during use and can lead to serious injury or death.**

Use only Rultract OEM parts and service as provided at the factory authorized Rultract OEM service center. The use of any other replacement parts is potentially dangerous, could put the hospital, operating room staff and patient at risk, and can lead to serious injury or death.

USING OUTSIDE SERVICE VENDORS TO SERVICE/REPAIR YOUR RULTRACT RETRACTOR:
Rultract is the only authorized service center for the Rultract Retractor System. Outside service vendors are not authorized to service or repair the Rultract Retractor System and do not have access to all Rultract OEM replacement parts. Using outside service vendors to service/repair your Rultract retractor system is potentially dangerous, could put the hospital, operating room staff and patient at risk, and can lead to serious injury or death.

REPLACEMENT: REAS: Exceeded Useful Lifespan
Rultract Ratchet Assemblies and Rake Plate Assemblies purchased prior to 2000, with no OEM maintenance history or relevant product update history, require replacement.

WARNING:
Any modification or alteration to a Rultract® product by user is dangerous, could put the hospital, operating room staff and patient at risk, and can lead to serious injury or death. This action will also will void all warranties and release Rultract® from any liability.

HANDLING OF RULTRACT® RETRACTOR
The Rultract Retractor System uses An OEM specific cable which holds the Snap Clip and Rake Plate. If the proper OEM pieces are not used and the pieces are not serviced in regular intervals by a factory trained technician, they could separate during surgery, possibly causing serious injury or death.

CAUTION:
**** Always allow rake plate to hang freely when winding Cable (pages 25 & 33).** The weight of Rake Plate allows for proper alignment of Cable on Spool. Failure to allow the Rake Plate to hang freely may cause the Cable to kink during winding. Leave approximately one to two inches of Cable exposed to prevent flexing of Cable on Cable Guide at insertion site.

CAUTION:
Always insert spool cap pin into the groove of the gearbox (pages 24 & 32). Failure to do so may result in disassembly or damage to the unit.

PROPER SERVICING AND REPAIR OF YOUR RULTRACT RETRACTOR SYSTEM

WARNING: -
USING OUTSIDE SERVICE VENDORS TO SERVICE/REPAIR YOUR RULTRACT RETRACTOR SYSTEM:

USING OUTSIDE SERVICE VENDORS TO SERVICE/REPAIR YOUR RULTRACT RETRACTOR:

Rultract is the only authorized service center for the Rultract Retractor System. Outside service vendors are not authorized to service or repair the Rultract Retractor System and do not have access to all Rultract OEM replacement parts.

Use only Rultract OEM parts and service as provided at the factory authorized Rultract OEM service center. The use of any other replacement parts is potentially dangerous, could put the hospital, operating room staff and patient at risk, and can lead to serious injury or death.

Using outside service vendors to service/repair your Rultract retractor system is potentially dangerous, could put the hospital, operating room staff and patient at risk, and can lead to serious injury or death.

HANDLING OF RULTRACT® RETRACTOR CABLE

The Rultract Retractor System uses a specific cable which holds the Snap Clip and Rake Plate. If the proper OEM pieces are not used and the pieces are not serviced in regular intervals by a factory trained technician, they could separate during surgery potentially causing serious injury or death.

CAUTION:

****Always allow rake plate to hang freely when winding Cable.** The weight of Rake Plate allows for proper alignment of Cable on Spool. Failure to allow the Rake Plate to hang freely may cause the Cable to kink during winding. Leave approximately one to two inches of Cable exposed to prevent flexing of Cable on Cable Guide at insertion site.

CAUTION:

Always insert spool cap pin into the groove of the gearbox. Failure to do so may result in disassembly or damage to the unit.

Contact Rultract at service@rultract.com or 888-550-5695 to schedule service/repair or with questions concerning routine maintenance and service.

PRECAUTIONS INDEX

CAUTION: Check and tighten all fasteners after cleaning and prior to sterilization and prior to each use. Failure to do so may result in components to loosen or disassemble during use (see p. 41-44).

CAUTION: Do not remove retaining Roll Pins *(4100P-18) and ***(4100P-16), (see p. 42, 45).

CAUTION: Hand tighten Spool Cap Nut securely (see p. 06, 22-24, 44, 47).

CAUTION: Lock Knob MUST be inserted in a detent for secure placement of accessories (see p. 06, 09, 22-24)

CAUTION: All Lock Knobs on Tube Assembly MUST be aligned with a detent and securely tightened in closed position (see p. 06, 22).

CAUTION: Improper placement of clamp on table rail over rail mounting bolt will cause misalignment of jaws and prevent secure attachment to table (see p. 13-14).

CAUTION: Disassemble unit prior to cleaning. The spool cap nut must be removed to separate the spool, spool cap, crank handle assembly and gearbox assembly (see page 30-32). ***DO NOT remove fasteners or roll pins for proper cleaning and sterilization.*** Further disassembly may void warranty and/**or damage the product.**

CAUTION: **Always allow rake plate to hang freely when winding Cable.** The weight of Rake Plate allows for proper alignment of Cable on Spool. Failure to allow the Rake Plate to hang freely may cause the Cable to kink during winding. Leave approximately one to two inches of Cable exposed to prevent flexing of Cable on Cable Guide at insertion site. (see p. 48, 56).

CAUTION: Always insert spool cap pin into the groove of the gearbox. Failure to do so may result in disassembly or damage to the unit (see p. 47, 55)

CAUTION: Always stabilize the single rake by hand to elevate and expose operative site. Failure to do so may result in rake slipping (see p. 09).

CAUTION: **The Dull Tip Sternal Rake Plate is available as an accessory. The exact physiology of the sternum cannot be determined until the chest is opened. Therefore, the requesting institution assumes responsibility of having a Sharp Tip Sternal Rake Plate Assembly available at all times** (see p. 06).

Fig. 01

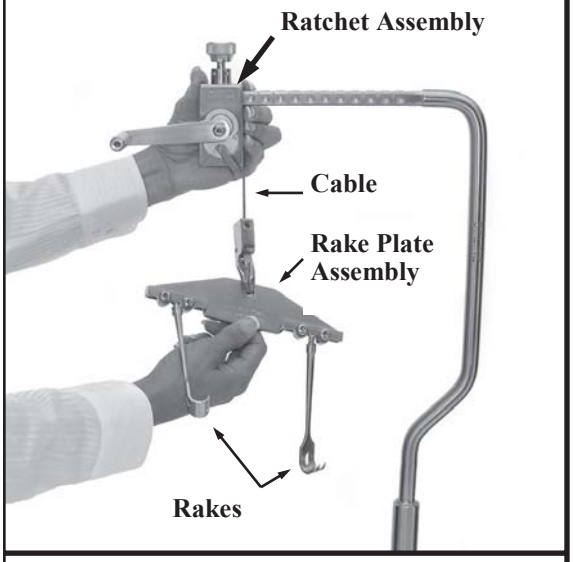

Fig. 02

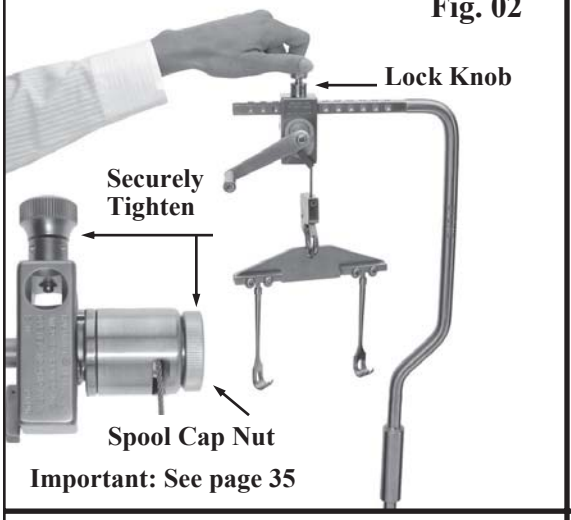

Important: See page 35

RATCHET ASSEMBLY (4100-IMR-41) AND RAKE PLATE ASSEMBLY, (4100-52), are components of a unique retractor to lift an incision site. The ratchet portion of the Rultract® Retractor operates as a winch. When lifting, tension generated on the Cable is transferred to the self-locking Gearbox. The ratcheting system (Fig. 01) gently and evenly elevates the sternum at approximate increments of 1 mm per click and locks into place. The Rake Plate and Rakes pivot independently to adapt to the configuration of the sternum.

Attaching Ratchet Assembly To Top Post

Back out (open) the non-removable Lock Knob until it stops (Fig. 02). The Crank Handle may be placed either to the right or left of the surgeon depending on preference. The Top Post has alignment marks and detents on the squared section for securing the Ratchet Assembly to the post. Slide the Ratchet Assembly onto Top Post to desired position between alignment marks. Placement of the Ratchet Assembly between alignment marks locates the Lock Knob directly over detent for proper tightening (Fig. 04). Tip of Lock Knob must completely insert into detent of Top Post to assure proper seating. Note opened and closed position of Lock Knob (Fig. 05 & 06). **CAUTION: Hand tighten Lock Knob and Spool Cap Nut securely** (Fig. 02).

Release or Reverse Ratchet

To release or reverse the Ratchet, firmly grasp Crank Handle and turn slightly (approximately 1 mm.) in the direction it will move. While maintaining tension on the crank handle, simultaneously shift Ratchet Lever ***COMPLETELY*** in the opposite direction to **slowly** lower site (Fig. 03).

Fig. 03

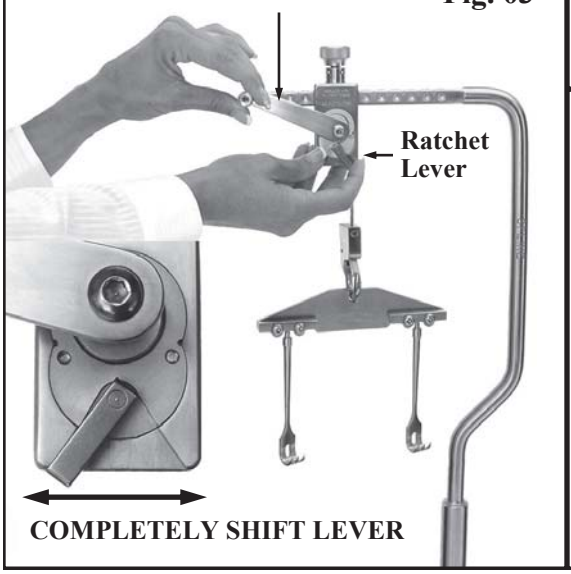

Tip of Lock Knob must insert into detent of square bar

Fig. 04

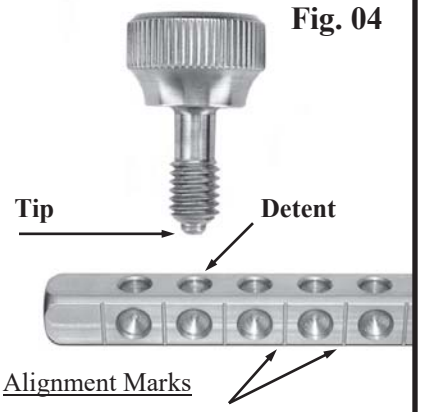

Knob Opened

Fig. 05

Knob Closed

Fig. 06

Suggestions for Application and Removal of Rultract® Sternotomy Rakes

01. Ratchet Assembly should be positioned and secured in place at center of Top Post for average size patient.
02. Position Rakes at lower manubrium and lower sternum.
03. Place flat surface of the Rake flush against the sternal edge for secure grab.

The Ratchet mechanism will retract the operative site at approximately 1 mm. per click and lock into place after each click. Retract sternum slowly as dissection progresses medially. **Slowly elevate throughout procedure as needed for exposure. To release or reverse the ratchet, firmly grasp Crank Handle and turn *slightly (approximately 1 mm.)* in the direction it will move.** While maintaining tension on the Crank Handle, simultaneously shift ratchet lever ***COMPLETELY*** in the opposite direction to **slowly** lower site.

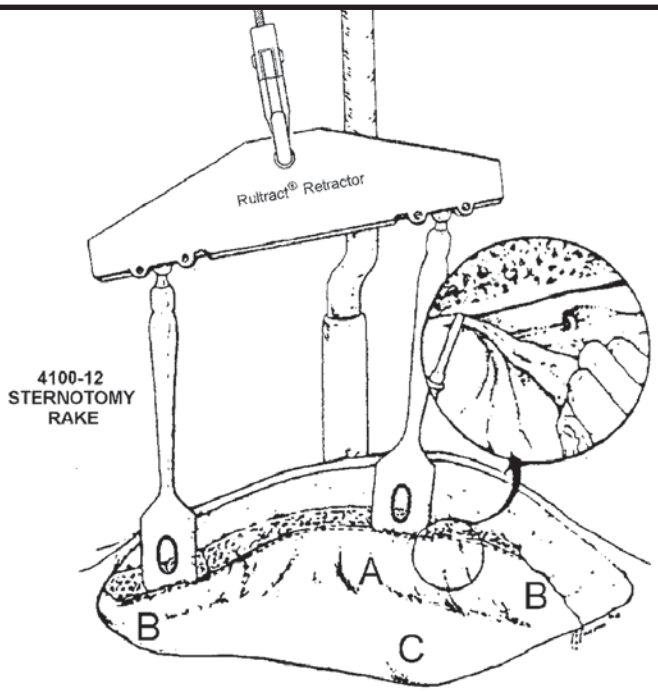

OPERATOR'S VIEW:

Operator's view after placement of the retractor.
A) Fibrofatty areolar tissue.
B to B) After completing incision, gentle retraction and finger dissection exposes vessels.
C) Pericardium.

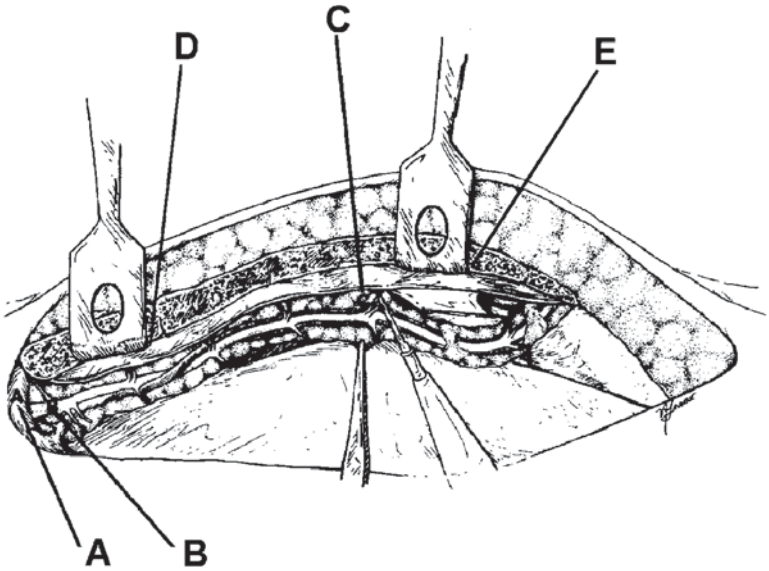

PROPER PLACEMENT:

Proper placement of rakes at lower manubrium and lower sternum. Parallel incisions 1 cm. lateral and medial to the internal thoracic vessels. Gentle retraction from the lateral edge of the pedicle helps in the dissection.
(A) Subclavian vein.
(B) Internal thoracic artery.
(C) Perforating branches.
(D) Lower manubrium.
(E) Lower sternum.

From the Department of Thoracic and Cardiovascular Surgery,
St. Vincent Charity Hospital and Health Center, East 22nd Street, Cleveland, OH 44115

Rultract Inc. 5663 Brecksville Rd. Cleveland, Ohio 44131 U.S.A.
Email: rultract@rultract.com Website: www.rultract.com

***ACCESSORIES*:**

SINGLE RAKE: Remove the supplied Sharp Tip Sternal Rake Plate Assembly from the Snap Clip (Fig. 01) and replace with a single rake. Example: With an Extender Bar and Snap Clip, the unique lifting design of the Rultract® System may be used with a variety of single rakes. The optional Extender Bar gives direct upward lift of xiphoid area (Fig. 02).

DULL TIP RAKE PLATE: The Dull Tip Sternal Rake Plate Assembly is an accessory available for use with the fragile sternum. ***Use of the Dull Tip Rake Plate is at surgeon's discretion.*** (See *Proper Placement* drawing, p. 5).

Fig. 01

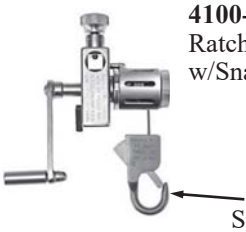

Sharp Plate

Fig. 02

Fig. 03

Accessory: 4100-52D
Dull Tip Sternal Rake
Plate Assembly

Dull Plate

Comparison: Sharp Tip Rake vs. Dull Tip Rake	Sharp Tip Sternal Rake 4100-12	Dull Tip Sternal Rake 4100-12D
Each Ratchet/Rake Assembly is sold with Sharp Tip Sternal Rakes. The supplied Sharp Tip Sternal Rakes on the Rultract® IMA retractor are designed for use on all patients. To **secure elevation of the sternum without slipping** the flat surface of rake should be flush against sternal edge. While retracting slowly, the rake tips penetrate the sternum. **CAUTION:** **The Dull Tip Sternal Rake Plate is available as an accessory. The exact physiology of the sternum cannot be determined until the chest is opened. Therefore, the requesting institution assumes responsibility of having a Sharp Tip Sternal Rake Plate Assembly available at all times.**	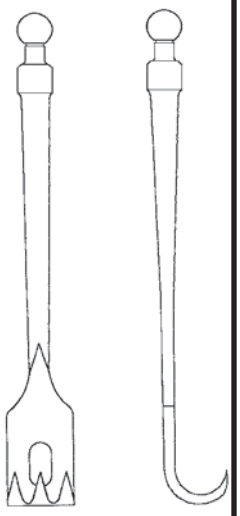	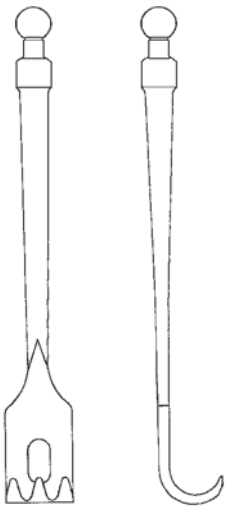

Rultract Inc. 5663 Brecksville Rd. Cleveland, Ohio 44131 U.S.A.
Email: rultract@rultract.com Website: www.rultract.com

Single Rake Use: Xiphoid Entry

Attach Extender Bar to end of Top Post and mount Ratchet Assembly. Remove Sternal Rake Plate Assembly from Snap Clip and replace with Xiphoid Rake (Fig. 01).
After dissection is started position rake under xiphoid process (Fig. 02). Stabilize rake by hand (Fig. 03). SLOWLY elevate to insure proper placement. The ratchet mechanism will retract the operative site at approximately 1 mm. per click and lock into place after each click. ***Slowly elevate throughout the procedure as needed for exposure.***
Caution: Always stabilize the single rake by hand to elevate and expose operative site. Failure to do so may result in rake slipping.

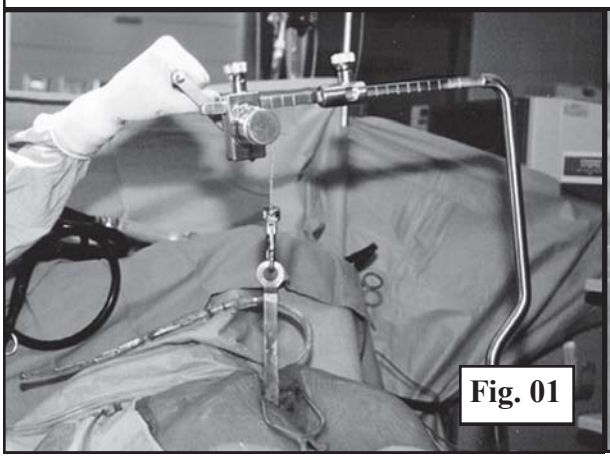
Fig. 01

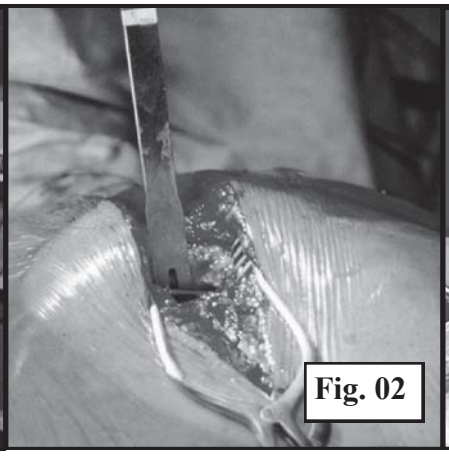
Fig. 02

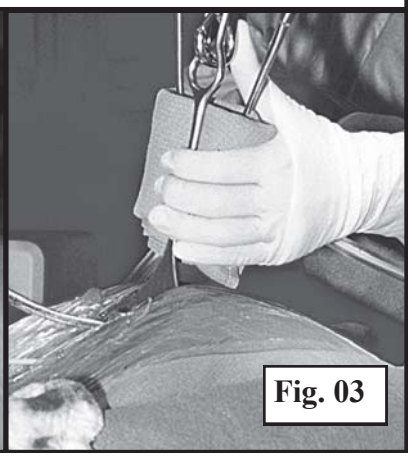
Fig. 03

4100-39S: EXTENDER BAR with CROSS SQUARE *(see p. 21)*
Horizontal Position Into Hub: Extender Bar attached to Top Post positions ratchet over xiphoid area for direct upward lift of incision site (Fig. 04).

Horizontal Position Thru Cross Square for Right Angle Extension:
With arm board in place Cross Square feature provides proper placement of ratchet to chest wall by mounting Rultract® System above or below the arm board (Fig. 05 & 06).

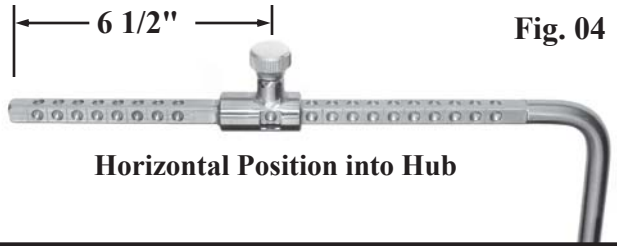

Fig. 04
Horizontal Position into Hub

Fig. 05
Extender Over Detent

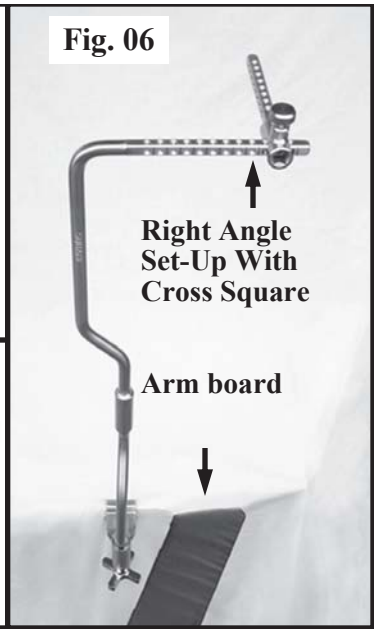

Fig. 06

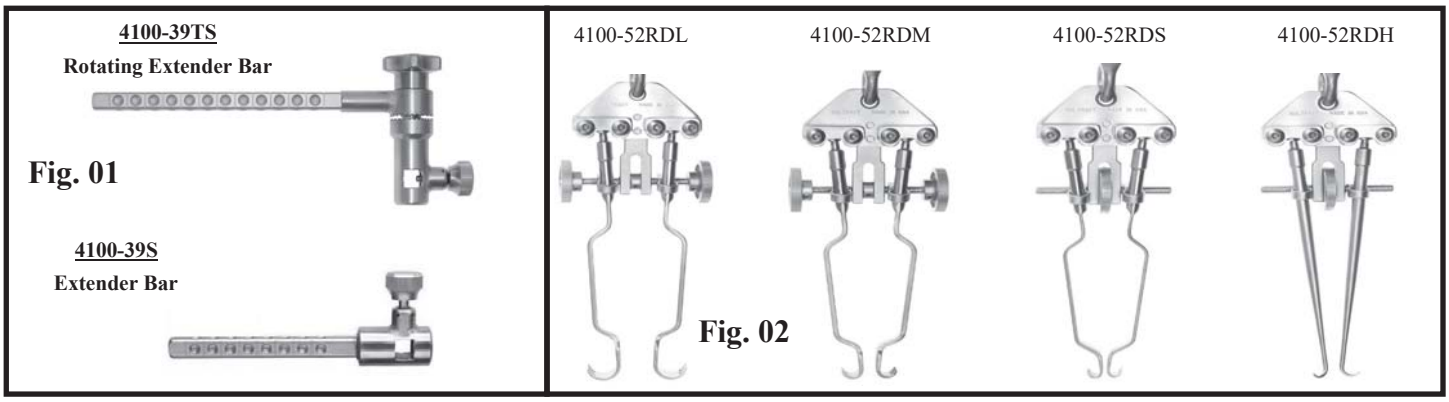

Resternotomy Attachments

Attach Extender Bar of choice (Fig. 01) to end of Top Post (see pages 20-22 for detailed instructions). Attach the Ratchet Assembly at the desired location on the Extender bar. Connect desired size Resternotomy depending on patients anatomy and surgeons preference. (Fig. 02).

Technique and procedure:

-

The old sternotomy incision is reopened from the skin down to the sternum. The scar is not excised unless it is unusually wide. Exposed sternal wires or other closure material are then removed.

The Linea alba below the xiphoid process is reopened. Finger dissection under the xiphoid and lower sternum is to be avoided, as the right ventricle can easily be injured with this maneuver. While the edges of the Linea alba are separated with the assistance of hand held retractors, division of the outer table of the sternum is begun.

Once the lowest part of the sternum is completely divided, the Rultract re-sternotomy retractor is placed at the base of the sternum to provide for ventral and cephalic traction in order to facilitate the separation of the sternal edges beginning at the lowest part of the sternum. A self-retaining Weitlaner style retractor is then placed at the base of the incision to assist in retraction.

The sternum is then spread and lifted using the Rultract re-sternotomy retractor. The gentle and precise action of the thumb wheels on the Rultract re-sternotomy retractor allows for avoidance of sudden wide retraction of the sternal edges to prevent tearing of soft tissues, such as the right atrium and ventricle, underneath the sternum.

The gentle upward and outward retraction also allows for the division of adhesions between the sternum and mediastinal structures under significantly increased direct or video assisted visualization. The retractor can be easily repositioned to provide continuous improved visualization as the dissection moves cranially until the suprasternal notch is reached. (Progressive division of the sternum can be helpful to proceed in points like the manubrium level where adhesions are usually thicker). Additional sternal wires or other closure material are then removed and the sternum is divided using a reciprocating saw.

Once the mediastinal structures are freed from adhesions and the sternum is reopened with the reciprocating saw, the Rultract re-sternotomy retractor can be removed and regular retractors are placed. From this point, the planned intracardiac procedure is performed.

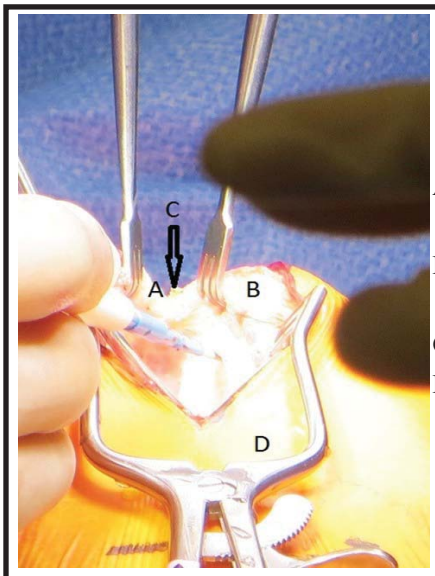

Fig. 03

A) Right aspect of the costal margin.
B) Left aspect of the costal margin.
C) Base of the Sternum.
D) Weitlaner style retractor

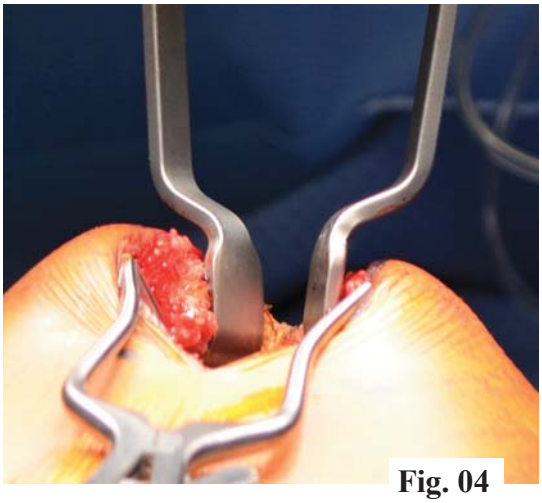

Fig. 04

Suggestions for Application and Removal of Rultract® Re-Sternotomy Rakes

1. Place the Rultract bedrail clamp at nipple height or higher.

2. Ratchet should be positioned and secured in place at center of Extender Bar for average size patient.

3. Divide upper lina alba and dissect tissue to safely position rakes on right and left aspects of the costal margin. A Weitlaner style retractor is placed below the xiphoid process to increase working area space. (Fig. 3).

4. Place flat surface of the Rake flush against the costal margin for secure grab. (Fig. 4).

5. Turn the handle of the Ratchet mechanism to elevate the operative site at approximately 1 mm per click. The handle will lock into place after each click and once the desired amount of elevation has been achieved.

5. Turning the rotating knobs on the Resternotomy attachments will spread the sternum slowly as dissection progresses (Fig. 5).

6. Slowly elevate and spread throughout procedure as needed for exposure.

7. Once the mediastinal structures are freed from adhesions and the sternum is reopened with the reciprocating saw, the Rultract re-sternotomy retractor can be removed and regular retractors are placed.

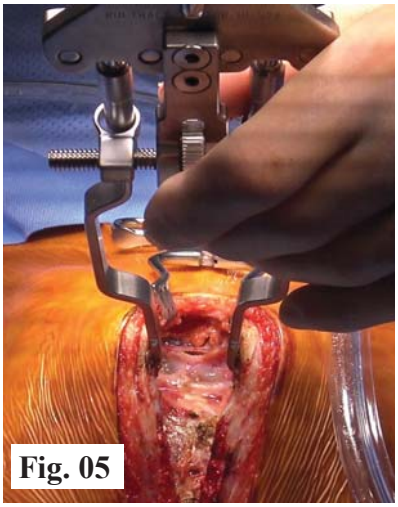

Fig. 05

8. To release or reverse the ratchet, firmly grasp Crank Handle and turn slightly (approximately 1 mm) in the direction it will move. While maintaining tension on the Crank Handle, simultaneously shift ratchet lever COMPLETELY in the opposite direction to slowly lower site.

<u>Slowly</u> elevate throughout the procedure as needed for exposure.

<u>Caution</u>: Always stabilize the retractor by hand to elevate and expose operative site. Failure to do so may result in rake(s) slipping.

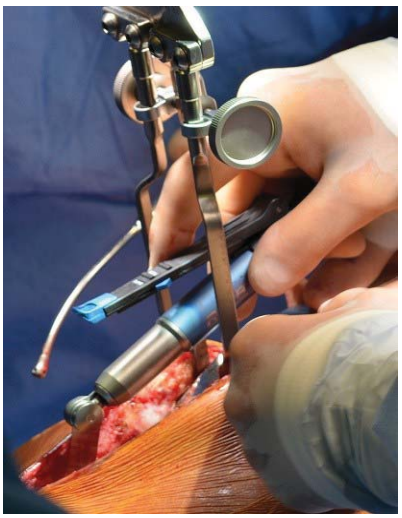

POST CLAMPS

4150	Square Tip, Double Bend Post/Clamp, Scrub Applied - 19" long
4150S-02	Spline Tip, Single Bend Post/Clamp Scrub Applied - 19" long
4160	Square Tip, Double Bend Post/Clamp, Circulator Applied - 20" long
4160S-02	Spline Tip, Single Bend Post/Clamp, Circulator Applied - 20" long

SQUARE TIP 90° Angle

SPLINE TIP 18° Increments

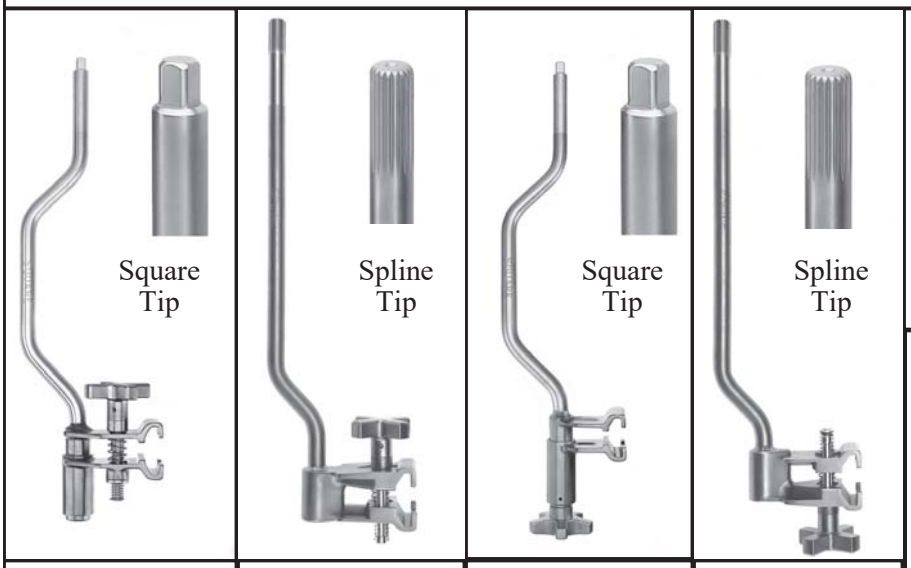

4150 Scrub Applied	4150S-02 Scrub Applied	4160 Circulator Applied	4160S-02 Circulator Applied

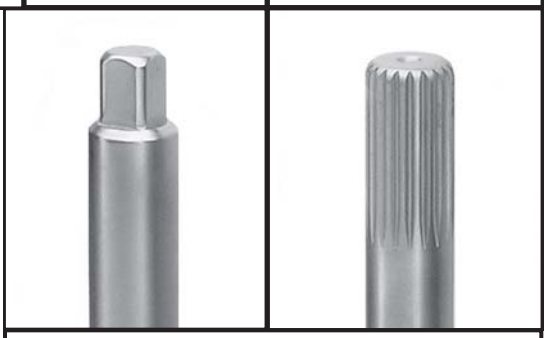

CLAMPS: ***COMBINATION CLAMP WITH REMOVEABLE POST***

4110	Round Base Combination Clamp
4110S	Square Base Combination Clamp

NOTE: The difference in appearance and function of the 4110 Clamp is the internal round base or square base. (See Below)

4110 Round Base	**4110S Square Base**

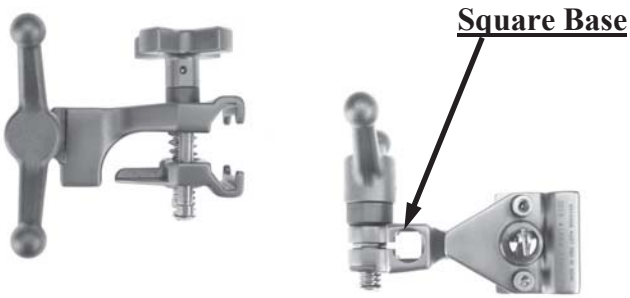

Rultract Inc. 5663 Brecksville Rd. Cleveland, Ohio 44131 U.S.A.
Email: rultract@rultract.com Website: www.rultract.com

FUNCTION OF CLAMP JAW

1. Each table clamp attaches to the operating table in a similar manner.
2. The patented shape of the jaw allows the clamp to attach to different size rails, with or without a drape.
3. Each clamp has a handle assembly, which is used to tighten (close) or loosen (open) the clamp jaws. Turning the handle clockwise tightens jaws. Turning the handle counter clockwise loosens jaws.
   Note: The combination clamp may be inverted. The locking rotation is still clockwise, though it may appear to be counter clockwise (Fig. 06).
4. Most operating tables have rail mounting bolts which attach the rail to the table. The clamp jaws have a centrally located notch to allow for positioning over a rail mounting bolt (Fig. 01 and 02).

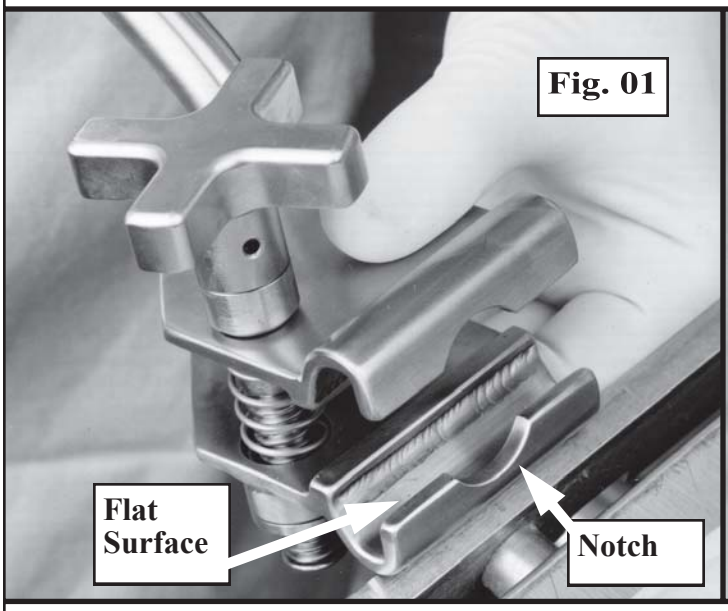

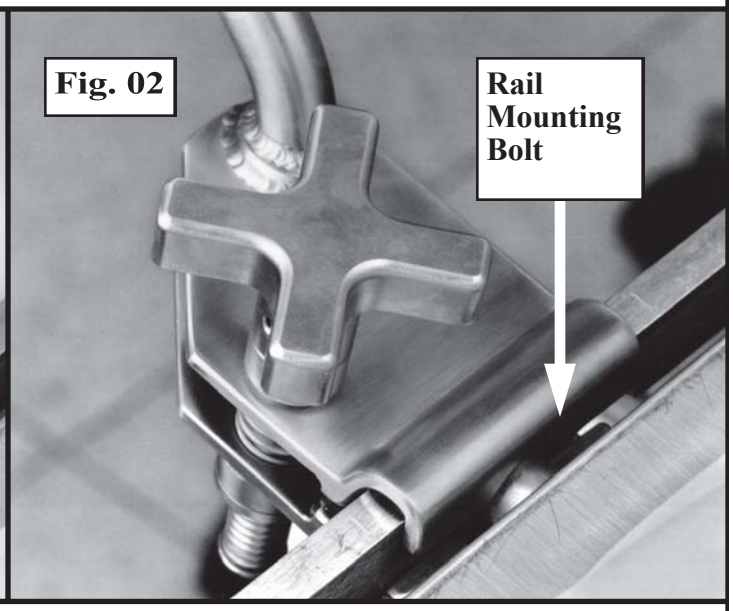

ATTACHING FIXED POST/CLAMP and COMBINATION CLAMP TO OPERATING TABLE

For Midsternotomy: Attach clamp to table rail approximately two inches below patient's axilla on the side to be dissected. Clamp position may change or be adjusted according to age and size of patient or physician's technique or preference.

1. Open clamp jaws completely by turning the cross handle counter clockwise. Hold clamp jaws with one hand and post with the other. Check for free movement of jaws by squeezing together then releasing.
2. Before attaching clamp to table rail, check for possible obstruction.
3. Hold clamp by the upper and lower jaws with one hand and slightly tilt upper jaw inward (toward table). Place upper jaw over the rail, then pivot lower jaw inward (toward the table). Both jaws should be in line with table rail.
4. Squeeze jaws together to assure there is no obstruction between jaws and rail. While holding jaws closed, securely tighten with cross handle (Fig. 03, 04, & 05).
5. When pulling on the post or body of the clamp, there should be no movement when applied properly. If clamp has movement, check for obstruction between jaws and table rail.

REMOVE SYSTEM FROM TABLE

1. After rake (s) are removed from patient, wind cable upward leaving approximately two inches exposed.
2. Remove all accessories from top post.
3. Remove top post from post/clamp.
4. Place one hand around clamp jaws to hold together during removal. Loosen cross handle by turning counter-clockwise until handle stops. A slight wiggle of clamp will release the clamping pressure which allows spring loaded jaws to separate.

Rultract Inc. 5663 Brecksville Rd. Cleveland, Ohio 44131 U.S.A.
Email: rultract@rultract.com Website: www.rultract.com

Demonstration: Attaching Clamp to rail

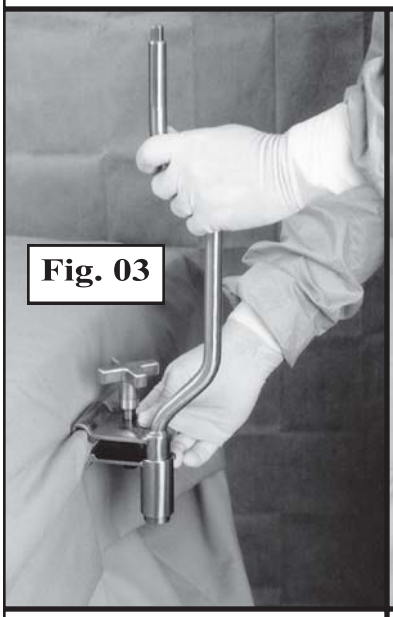

Scrub Applied
4150 or 4150S-02

Circulator Applied
4160 or 4160S-02

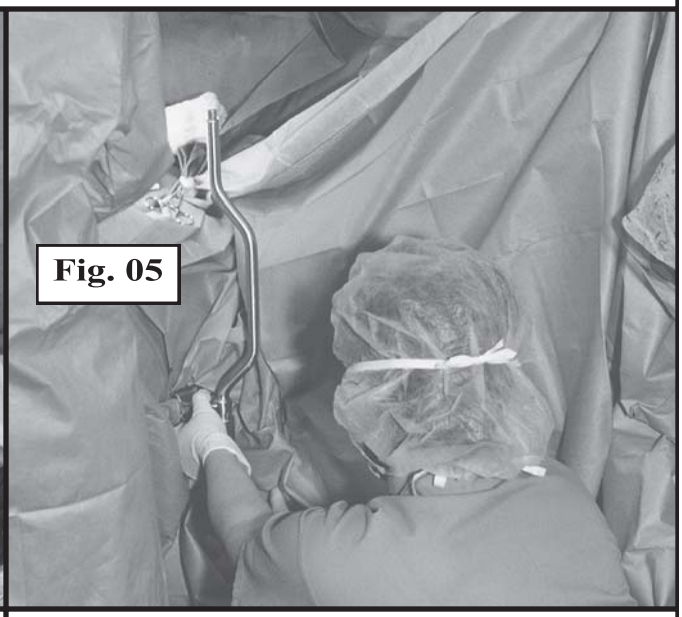

Demonstration:
Attaching Clamp to rail over drape.

Note: If Clamp still has movement after tightening

1. Check for obstruction (s) around the jaws. (Rail spacers bolts, padding, drapes, arterial lines, etc.) It may also be caused by jaw (s) of the clamp being out of alignment. This prevents full contact of clamp jaw on the table rail.
2. Clamp may appear to have some movement but is tight on the table rail. This movement may be caused by a loose table rail mounting. To remedy this, either have the bed rail tightened or return the Post/Clamp to Rultract® for re-alignment.
3. The original Post/Clamps do not have notches along flat surface of jaw. Notches will be added when returned for factory service. (Fig. 01)

Combination Clamp Fig. 06

4110 or 4110S
Scrub Applied

4110 or 4110S
Circulator Applied
(Inverted)

CAUTION:

Improper placement of clamp on table rail over rail mounting bolt will cause misalignment of jaws and prevent secure attachment to table (see page 11).

Wing Handle: For proper locking, post must be inserted flush with bottom of clamp or lower. Turn wing handle clockwise to tighten securely. This will compress the clamp body around the post.

Combination Clamp Features: (Fig. 06)

1. The Combination Clamp can be applied by scrub or circulator.
2. The Combination Clamp can be attached directly to the table rail or over the drape.

Rultract Inc. 5663 Brecksville Rd. Cleveland, Ohio 44131 U.S.A.
Email: rultract@rultract.com Website: www.rultract.com

***TOP POSTS*: Square and Spline inserts**

4100-32A	Square Top Post - standard length -	9 ½" x 18" long (square insert)
4100-32AL	Square Top Post - extended length -	9 ½" x 22" long (square insert)
4100-32AS-02	Spline Top Post, Single Bend - standard length	9 ½" x 19" long (spline insert)
4100-32ALS	Spline Top Post - extended length -	9 ½" x 23" long (spline insert)

SPECIAL ORDER ONLY

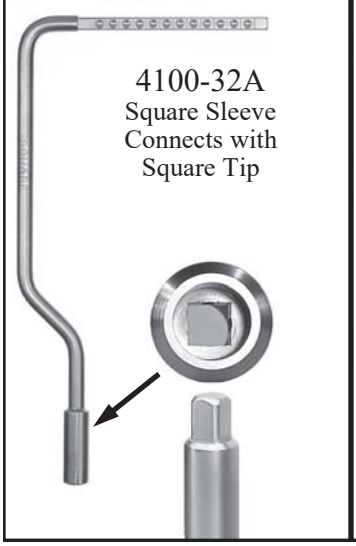

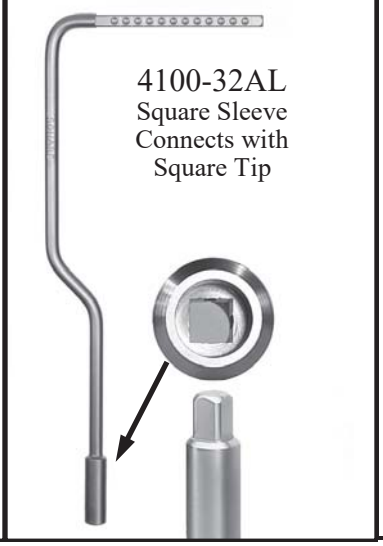

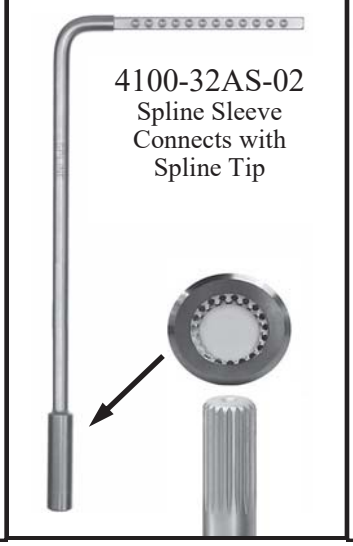

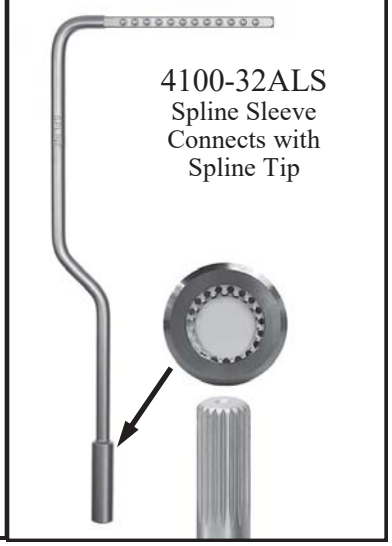

***ONE PIECE POSTS*: Round Base**

4100-08 One piece post - 9 ½" x 30" long

THIS ITEM HAS BEEN DISCONTINUED BY THE MANUFACTURER

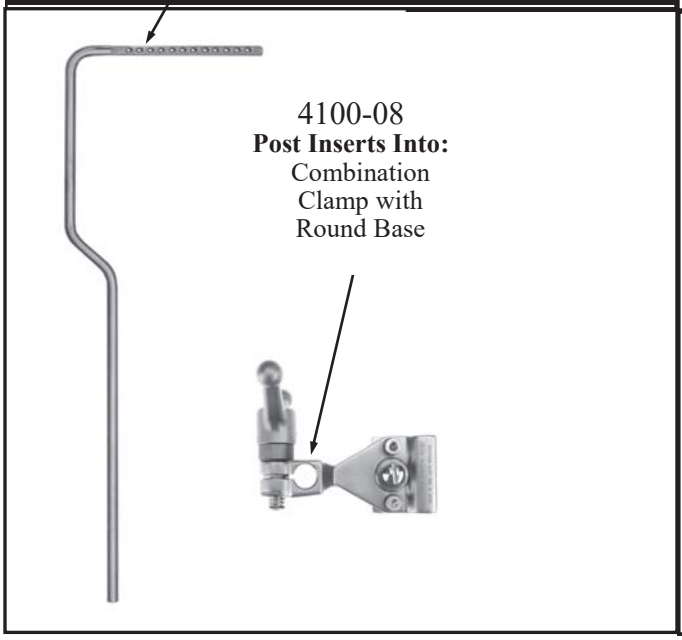

***TILTING TOP POSTS*: Square and Spline inserts**

4100-32AT	Square Tilting Top Post - 12 ½" x 20" long
4100-32AST	Spline Tilting Top Post - 12 ½" x 21" long

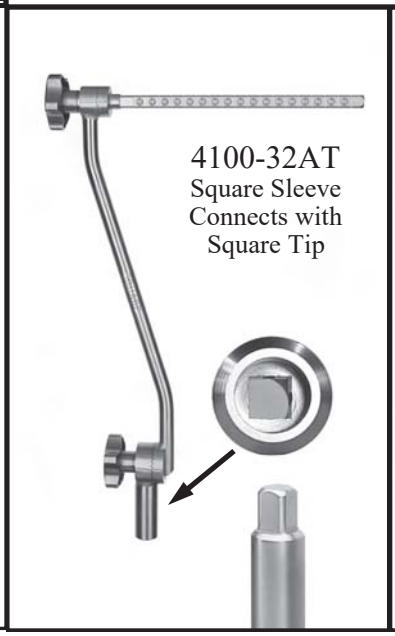

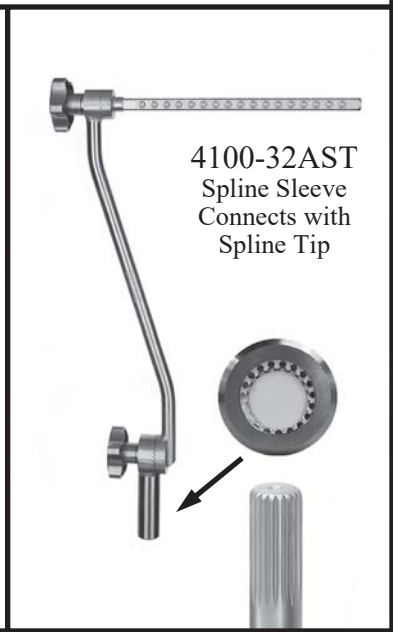

Rultract Inc. 5663 Brecksville Rd. Cleveland, Ohio 44131 U.S.A.
Email: rultract@rultract.com Website: www.rultract.com

***SQUARE TOP POSTS*: 4100-32A and 4100-32AL**

A square insert top post can only be used with a square tip post/clamp or bottom post. Once the post/clamp or bottom post has been securely fastened to the operating table, hold the top post vertically with the top perpendicular to the operating table. Place the sleeved end of the top post over the square tip of the connecting post and allow the top post to slide downward until the squares mate. A slight rotation of the top post may be needed to achieve proper seating. The squared post system angles at 90 degree increments. To change position of the top post, grasp the sleeve and the squared top end near the bend. Lifting upward approximately one inch will disengage the squared sections and allow the top post to angle in either direction to a 90 degree position. To reconnect squared sections, lower top post until it stops. A slight rotation of the top post may be needed to achieve proper seating. When the top post is properly seated it will not rotate.

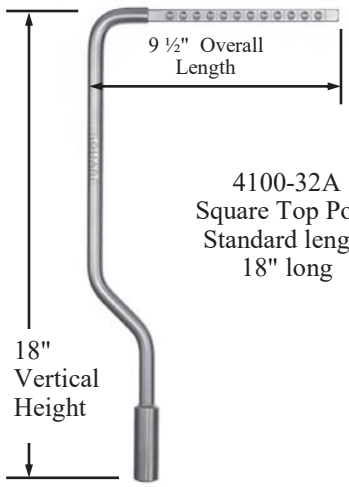

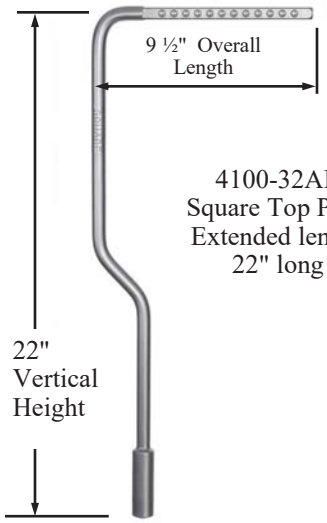

SQUARE SET: ALLOWS TOP POST TO ANGLE AT 90 DEGREE INCREMENTS

INTERNAL SQUARE	SQUARE TIP
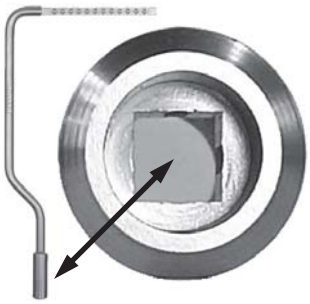	

Square Top Post Connects to: Options

4150

4160

4100-28C

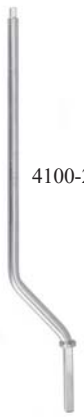
4100-28CP

4100-32C

DISCONTINUED

Description: Post/Clamps and Bottom Posts

4150	Square Tip, Double Bend Post/Clamp, Scrub Applied
4160	Square Tip, Double Bend Post/Clamp, Circulator Applied
4100-28C	Square Tip Double Bend Bottom Post, (square base)
4100-28CP	Offset Square Tip Bottom Post, (square base)
4100-32C	Square Tip Bottom Post with collar, (round base)

Rultract Inc. 5663 Brecksville Rd. Cleveland, Ohio 44131 U.S.A.
Email: rultract@rultract.com Website: www.rultract.com

***SPLINE TOP POST*: 4100-32AS-02 and 4100-32ALS**

A spline insert top post can only be used with a spline tip post/clamp or bottom post. Once the post/clamp or bottom post has been securely fastened to the operating table, hold the top post vertically with the top perpendicular to the operating table. Place the sleeved end of the top post over the spline tip of the connecting post and allow the top post to slide downward until the splines mate. A slight rotation of the top post may be needed to achieve proper seating. The spline post system angles at 18 degree increments. To change position of the top post, grasp the sleeve and the squared top end near the bend. Lifting upward approximately one inch will disengage the spline sections and allow the top post to angle in either direction at 18 degree increments. To reconnect spline sections lower top post until it stops. A slight rotation of the top post may be needed to achieve proper seating. When the top post is properly seated it will not rotate.

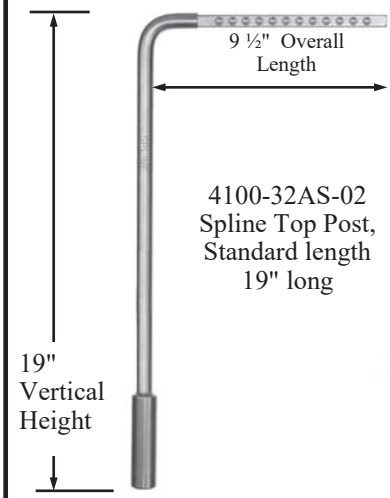

SPECIAL ORDER ONLY

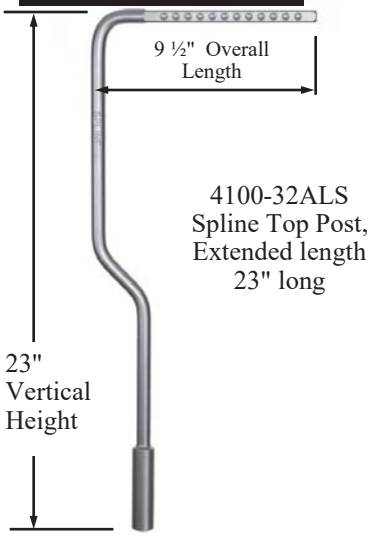

SPLINE SET: ALLOWS TOP POST TO ANGLE AT 18 DEGREE INCREMENTS

INTERNAL SPLINE	SPLINE TIP

Spline Top Post Connects to: Option

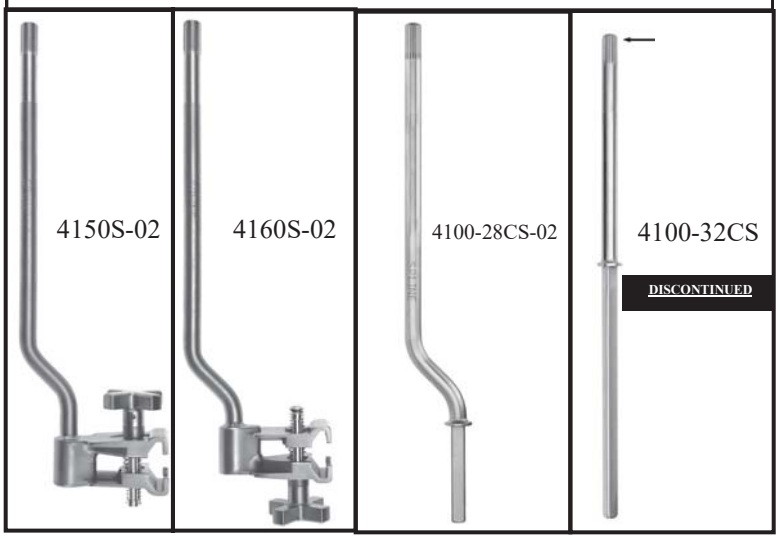

Description: Post/Clamps and Bottom Posts

4150S-02	Spline Tip, Single Bend Post/Clamp Scrub Applied.
4160S-02	Spline Tip, Single Bend Post/Clamp Circulator Applied.
4100-28CS-02	Spline Tip Single Bend Bottom Post, (square base)
4100-32CS	Spline Tip Bottom Post with collar, (square base)

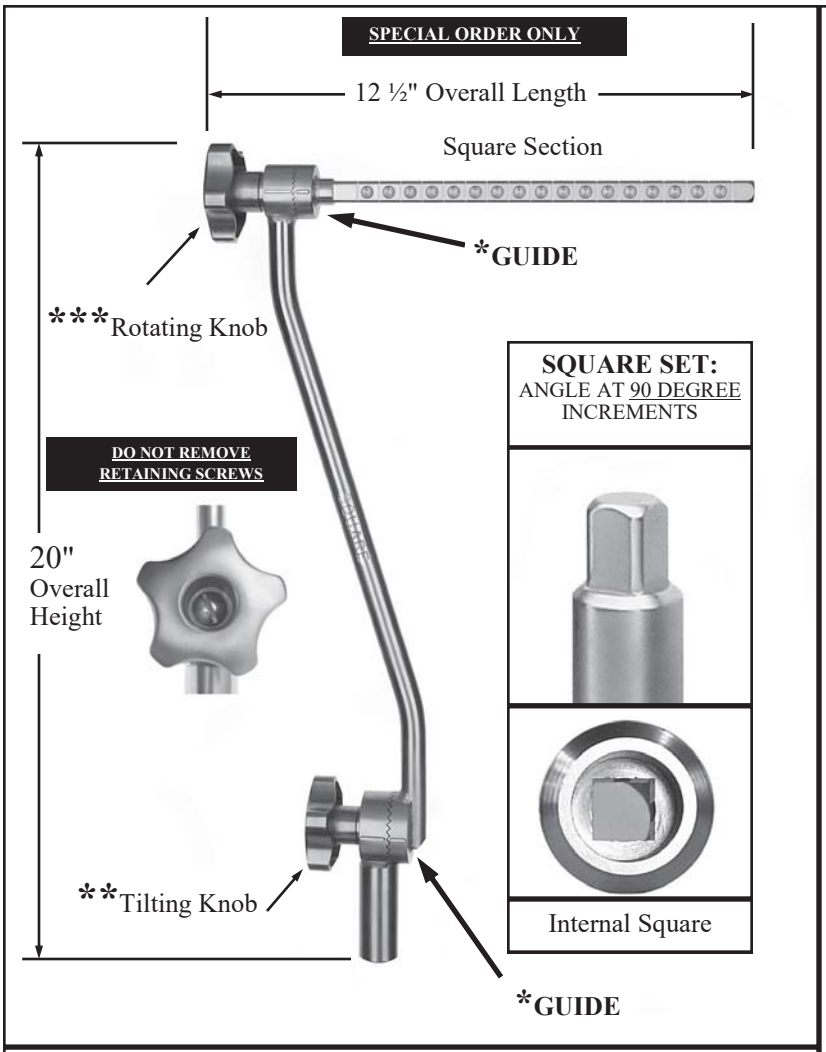

Square Tilting Top Post Connects to: Options

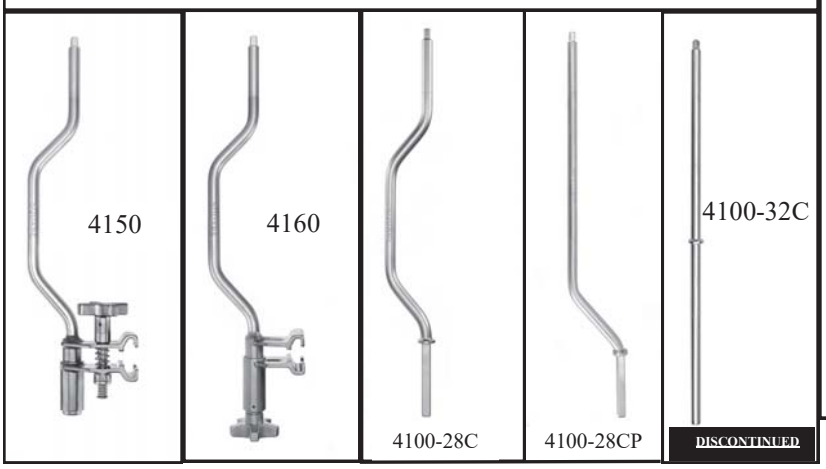

4150	Square Tip, Double Bend Post/Clamp, Scrub Applied
4160	Square Tip, Double Bend Post/Clamp, Circulator Applied
4100-28C	Square Tip Double Bend Bottom Post (square base)
4100-28CP	Square Tip Offset Bottom Post (square base)
4100-32C	Square Tip Bottom Post w/ Collar (round base)

SQUARE TILTING TOP POST: 4100-32AT

A square insert top post can only be used with a square tip post/clamp or bottom post. Once the post/clamp or bottom post has been securely fastened to the operating table, hold the top post vertically with the top perpendicular to the operating table. Place the sleeved end of the top post over the square tip of connecting post and allow the top post to slide downward until the squared sections mate. A slight rotation of the top post may be needed to achieve proper seating. The squared post system angles at 90 degree increments. To change position of the top post, grasp the sleeve and the squared top near the bend. Lifting upward approximately one inch will disengage the squared sections and allows the top post to angle in either direction at 90 degrees. To reconnect squared sections, lower top post until it stops. A slight rotation of the top post may be needed to achieve proper seating. When the top post is properly seated it will not rotate.

Guide Marks:
To obtain true vertical position, guide* marks on both upper and lower sections of post must be aligned.

Tilt Post:
Top post properly seated can now be tilted to the desired position. While holding the squared top section, **loosen the attached tilting knob**** counter clockwise **until it stops**. This will separate the spring loaded sections which allows the post to tilt. When the desired position is obtained, tighten the knob by turning clockwise. This function allows for various height and lateral retraction.

Rotate Square Section:
The square top section rotates 360 degrees. To rotate, **loosen the attached rotating knob***** by turning counter clockwise **until it stops**. The toothed sections are spring loaded to help separate the two halves. Once separated the squared top section can be rotated freely. When the desired position is obtained, tighten the rotating knob by turning clockwise. When tightened, the teeth mate and the unit is secure. This function allows the user to adjust the lift angle to a lateral position between the ratchet and the incision site.

Rultract Inc. 5663 Brecksville Rd. Cleveland, Ohio 44131 U.S.A.
Email: rultract@rultract.com Website: www.rultract.com

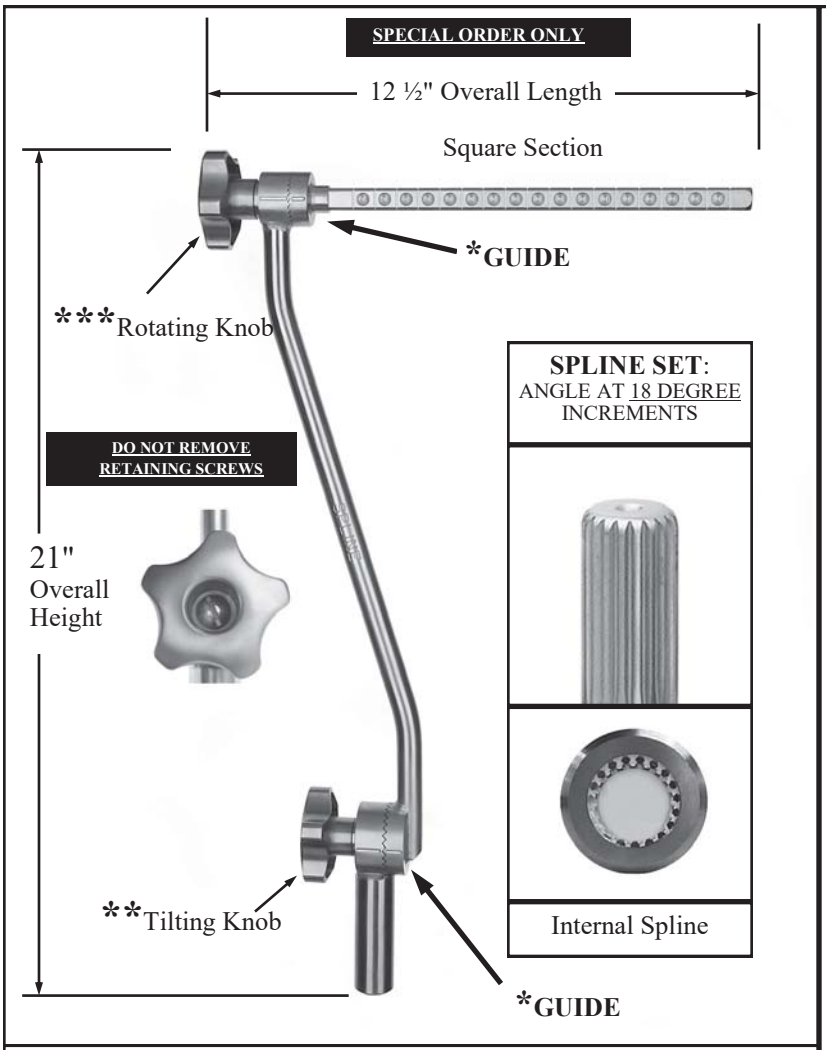

Spline Top Post Connects to: Option

4150S-02	Spline Tip, Single Bend Post/Clamp, Scrub Applied
4160S-02	Spline Tip, Single Bend Post/Clamp, Circulator Applied
4100-28CS-02	Spline Tip Single Bend Bottom Post (square base)
4100-32CS	Spline Tip Bottom Post w/ Collar (square base)

SPLINE TILTING TOP POST: 4100-32AST

A spline insert top post can only be used with a spline tip post/clamp or bottom post. Once the post/clamp or bottom post has been securely fastened to the operating table, hold the top post vertically with the top perpendicular to the operating table. Place the sleeved end of the top post over the spline tip of connecting post and allow the top post to slide downward until the spline sections mate. A slight rotation of the top post may be needed for proper seating. The spline post system angles at 18 degree increments. To change position of the top post, grasp the sleeve and the squared top section near the bend. Lifting upward approximately one inch will disengage the spline sections and allows the top post to angle in either direction at 18 degree increments. To reconnect spline sections lower top post until it stops. A slight rotation of the top post may be needed to achieve proper seating. When the top post is properly seated it will not rotate.

Guide Marks:
To obtain true vertical position, guide* marks on both upper and lower sections of post must be aligned.

Tilt Post:
Top post properly seated can now be tilted to the desired position. While holding the squared top section, **loosen the attached tilting knob**** counter clockwise **until it stops**. This will separate the spring loaded sections which allows the post to tilt. When the desired position is obtained, tighten the knob by turning clockwise. This function allows for various height and lateral retraction.

Rotate Square Section:
The square top section rotates 360 degrees. To rotate, **loosen the attached rotating knob***** by turning counter clockwise **until it stops**. The toothed sections are spring loaded to help separate the two halves. Once separated the squared top section can be rotated freely. When the desired position is obtained, tighten the rotating knob by turning clockwise. When tightened, the teeth mate and the unit is secure. This function allows the user to adjust the lift angle to a lateral position between the ratchet and the incision site.

Rultract Inc. 5663 Brecksville Rd. Cleveland, Ohio 44131 U.S.A.
Email: rultract@rultract.com Website: www.rultract.com

***ONE PIECE POST*:**
4100-08

THIS ITEM HAS BEEN DISCONTINUED BY THE MANUFACTURER

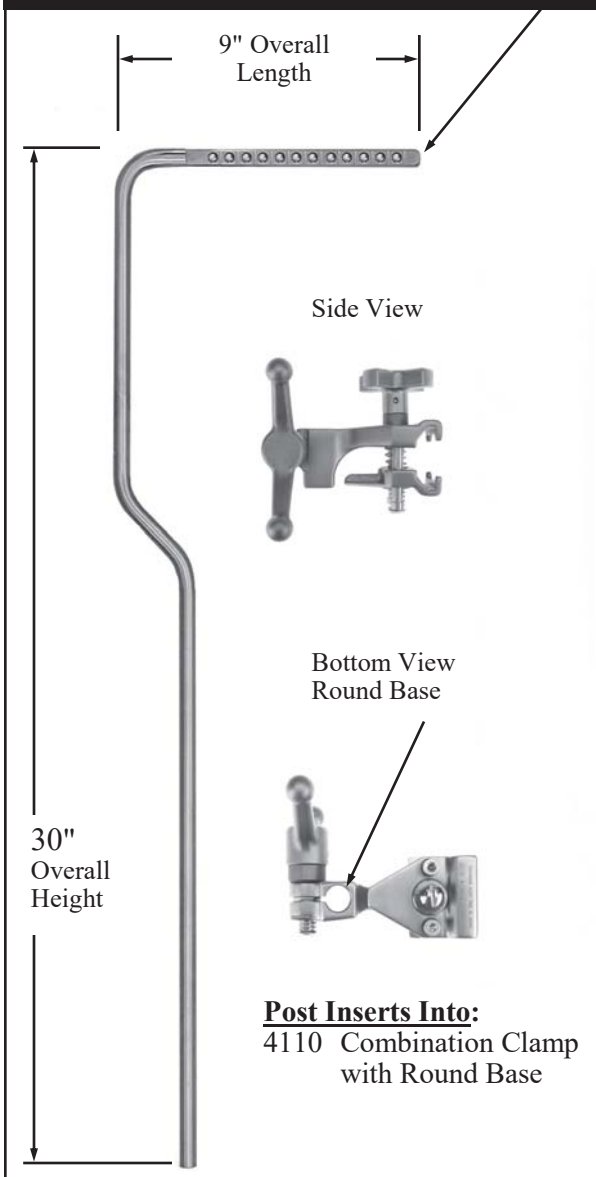

Post Inserts Into:
4110 Combination Clamp
with Round Base

One Piece Post
Either post can be used with a Rultract® round base Combination Clamp. The post is inserted into the clamp to desired height. Tighten securely. Drape per OR protocol.

RULTRACT® SQUARE AND SPLINE TIP STRAIGHT BOTTOM POST

THESE ITEMS HAVE BEEN DISCONTINUED BY THE MANUFACTURER

4100-32C
Square Tip Bottom Post With Collar (round base) 5/8" Dia. x 20" long

Post is used with a Rultract® round base combination clamp. For proper locking, post must be inserted flush with bottom of clamp or lower. Tighten securely. Drape per OR protocol.

4100-32CS
Spline Tip Bottom Post With Collar (square base) 5/8" Dia. x 20" long

Post is used with a Rultract® square base combination clamp. Flat on stop collar** must be facing away from the OR table for proper orientation of spline tip. For proper locking, post must be inserted flush with bottom of clamp or lower. Tighten securely. Drape per OR protocol.

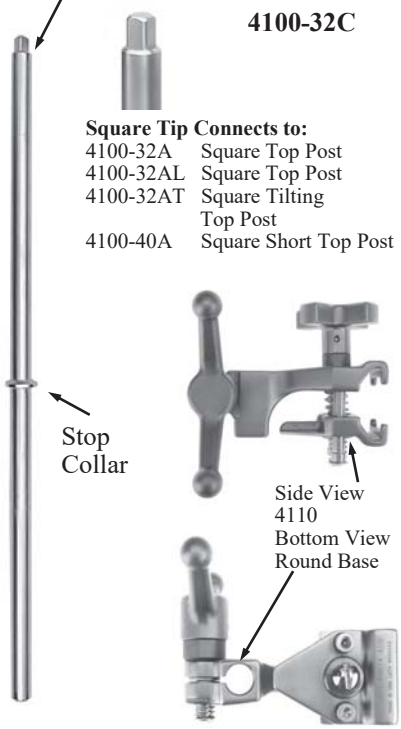

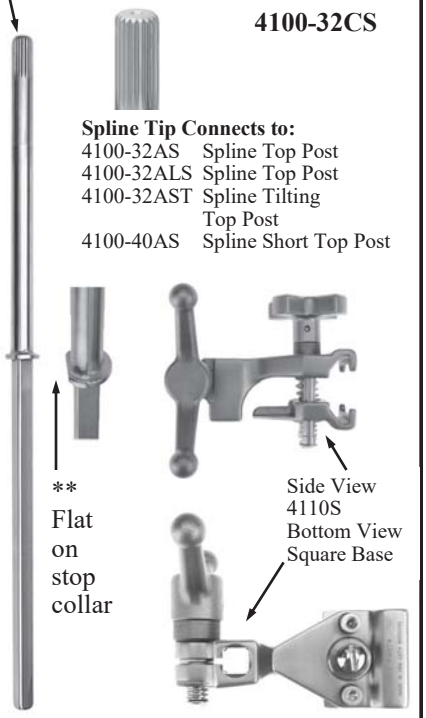

RULTRACT® SQUARE AND SPLINE TIP DOUBLE/SINGLE BEND BOTTOM POSTS

4100-28C
Square Tip Double Bend Bottom Post (square base) 5/8" Dia. x 18" long

Post is used with a Rultract® square base combination clamp. Lower post to stop collar. Tighten securely. Drape per OR protocol.

4100-28CS-02
Spline Tip Single Bend Bottom Post (square base) 5/8" Dia. x 18" long

Post is used with a Rultract® square base combination clamp. Lower post to stop collar. Tighten securely. Drape per OR protocol.

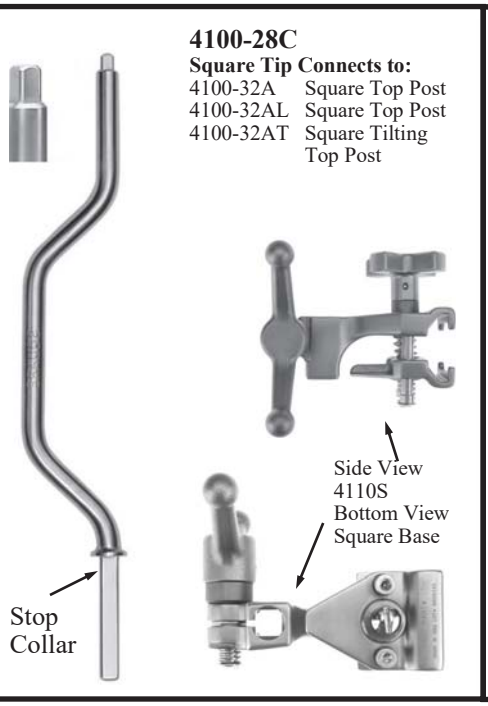

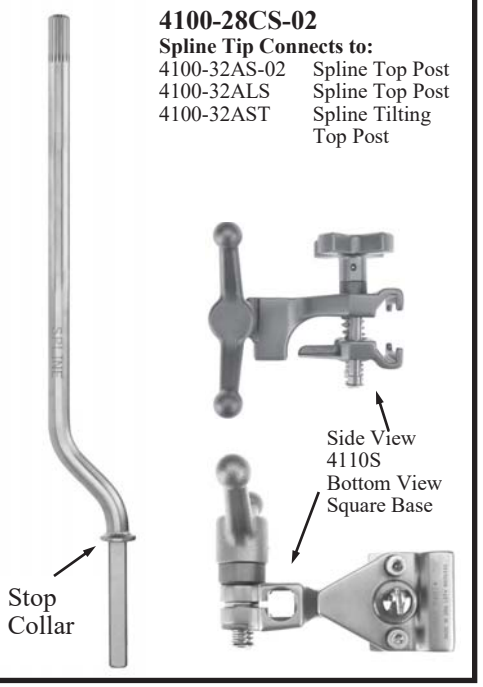

Rultract Inc. 5663 Brecksville Rd. Cleveland, Ohio 44131 U.S.A.
Email: rultract@rultract.com Website: www.rultract.com

LOCK KNOB INSTRUCTIONS:

Lock Knob components consist of: Gearbox, Extender Bars and Coupler Tube.
The nonremovable Lock Knob is used to tighten components securely on the Rultract® Systems. The Lock Knob. (Fig. 01) is threaded with a knurled surface for hand tightening. The tip of the knob is designed to fit into a detent of the square bar. The Lock Knob is retained with roll pins. (see p. 05)

Back out (open) the nonremovable Lock Knob until it stops. (Fig. 02) Slide the component onto square bar to desired location. The Lock Knob is used to secure component. To properly secure, tip of Lock Knob must completely enter the detent as you tighten. Note closed position of Lock Knob when attached to bar. (Fig. 03)

Fig. 01

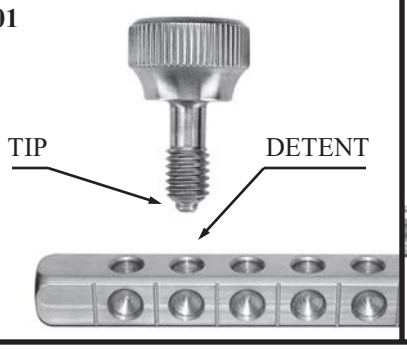

Lock Knob Opened **Fig. 02**

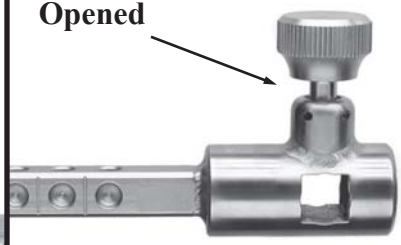

Opened without Bar

Lock Knob Closed **Fig. 03**

Closed without Bar

Closed on Bar

EXTENDER BAR: #4100-39S

To properly lock an Extender Bar in the selected position the tip of the Lock Knob must enter the detent as you tighten securely. Note Lock Knob opened (Fig. 02) and Lock Knob closed (Fig. 03).
(Fig. 04): Horizontal Position Into Hub
Back out nonremovable Lock Knob until it stops. With Lock Knob in vertical position slide hub onto post until it stops. Hand tighten knob securely.
(***Fig. 05 & 06): Horizontal Position Thru Cross Square for Right Angle Extension***
Back out nonremovable Lock Knob until it stops. With Lock Knob in vertical position slide cross square onto post to desired location **over a detent**. Hand tighten knob securely. See Extender Bar End View Over Detent.

CAUTION: Lock Knob **must** be inserted in a detent for secure placement of accessories.

Fig. 04 Horizontal Position Into Hub

One Extender Bar Attached to Top Post

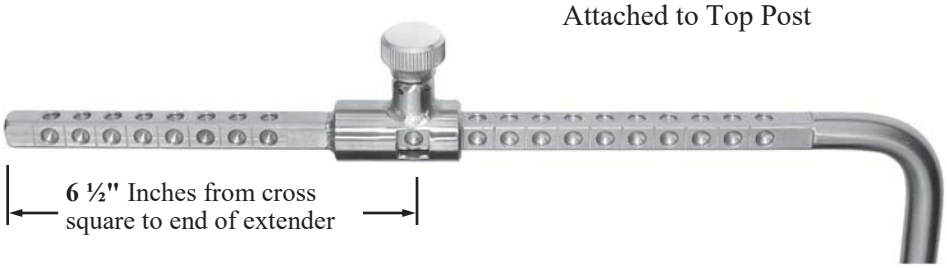

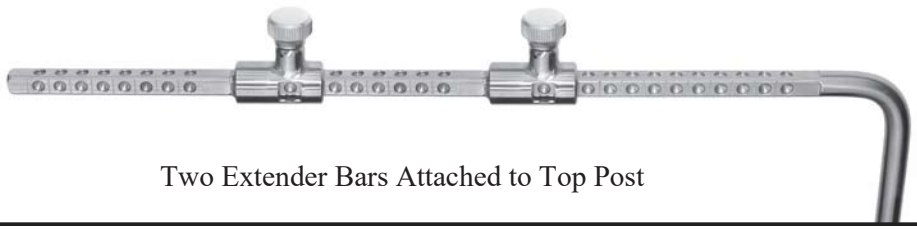

Two Extender Bars Attached to Top Post

Fig. 05

Horizontal Position Thru Cross Square for Right Angle Extension

Fig. 06

Extender Bar End View Over Detent

Rultract Inc. 5663 Brecksville Rd. Cleveland, Ohio 44131 U.S.A.
Email: rultract@rultract.com Website: www.rultract.com

***ROTATING EXTENDER BAR*: #4100-39TS**

The squared section of this bar rotates 360 degrees with positive locking every 12 degrees. To rotate, **loosen the attached Rotating Knob** by turning counter clockwise **until it stops**. The toothed sections are spring loaded to help separate the two halves. Once separated the squared section can be rotated freely. When the desired position is obtained, tighten the knob by turning clockwise. When tightened, the teeth mate and the unit is secure.

(Fig. 01) Rotating Vertical Position Thru Cross Square

Back out nonremovable Lock Knob until it stops. With Lock Knob at side position slide cross square onto post to desired location **over a detent**. Hand tighten knob securely.

(Fig 02) Right Angle Horizontal Position Into Hub

Back out nonremovable Lock Knob until it stops. With Lock Knob in vertical position slide hub onto post until it stops. Hand tighten knob securely.

(Fig 03) Horizontal Position Thru Cross Square

Back out nonremovable Lock Knob until it stops. With Lock Knob in vertical position slide cross square onto post to desired location **over a detent**. Hand tighten knob securely.

CAUTION: Lock Knob **must** be inserted in a detent for secure placement of accessories.

Fig. 01 Rotating Vertical Position Thru Cross Square
Gain two inches in height

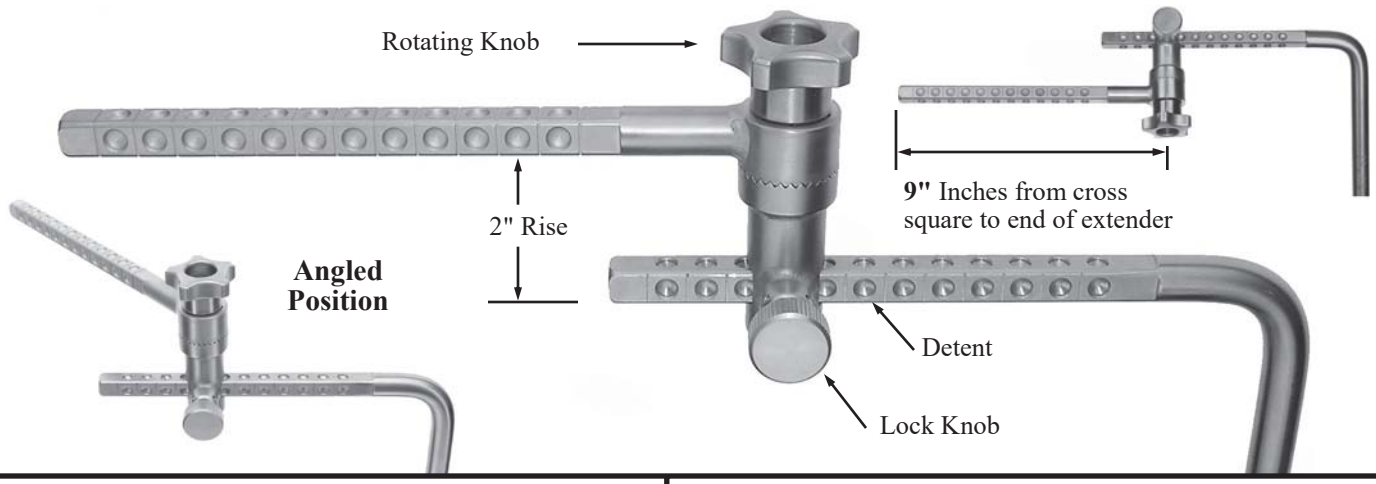

Inverted Position

Fig. 02 Right Angle Horizontal Position Into Hub

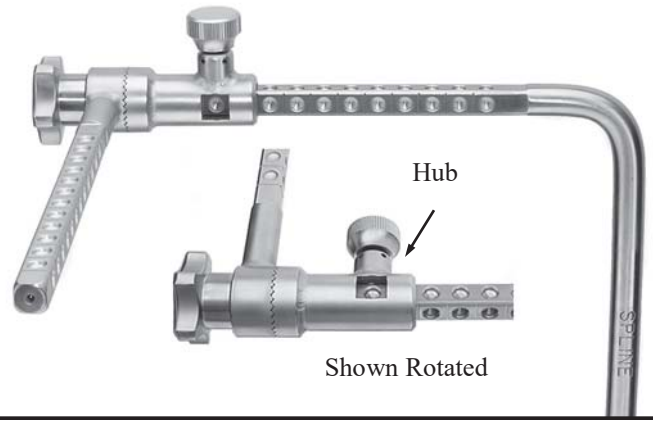

Fig. 03 Horizontal Position Thru Cross Square

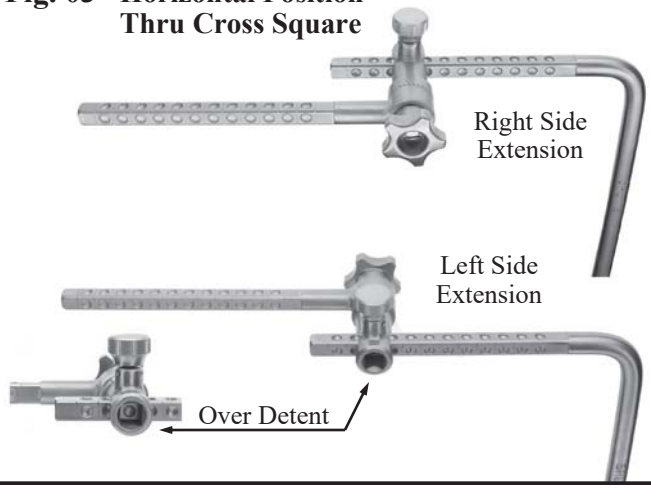

Rultract Inc. 5663 Brecksville Rd. Cleveland, Ohio 44131 U.S.A.
Email: rultract@rultract.com Website: www.rultract.com

***RISER EXTENDER BAR*: #4100-39R**

(Fig. 01) Vertical Position Thru Hub
Back out nonremovable Lock Knob until it stops. With Lock Knob in vertical position slide hub onto post to desired location **over a detent**. Hand tighten knob securely.
(Fig. 02) Right Angle Vertical Position Thru Cross Square
Back out nonremovable Lock Knob until it stops. With Lock Knob in vertical position slide cross square onto post to desired location **over a detent**. Hand tighten knob securely.
(Fig. 03) Horizontal Position Thru Hub
Back out nonremovable Lock Knob until it stops. With Lock Knob in the horizontal position slide hub onto post to desired location **over a detent**. Hand tighten knob securely.
CAUTION: Lock Knob **must** be inserted in a detent for secure placement of accessories.

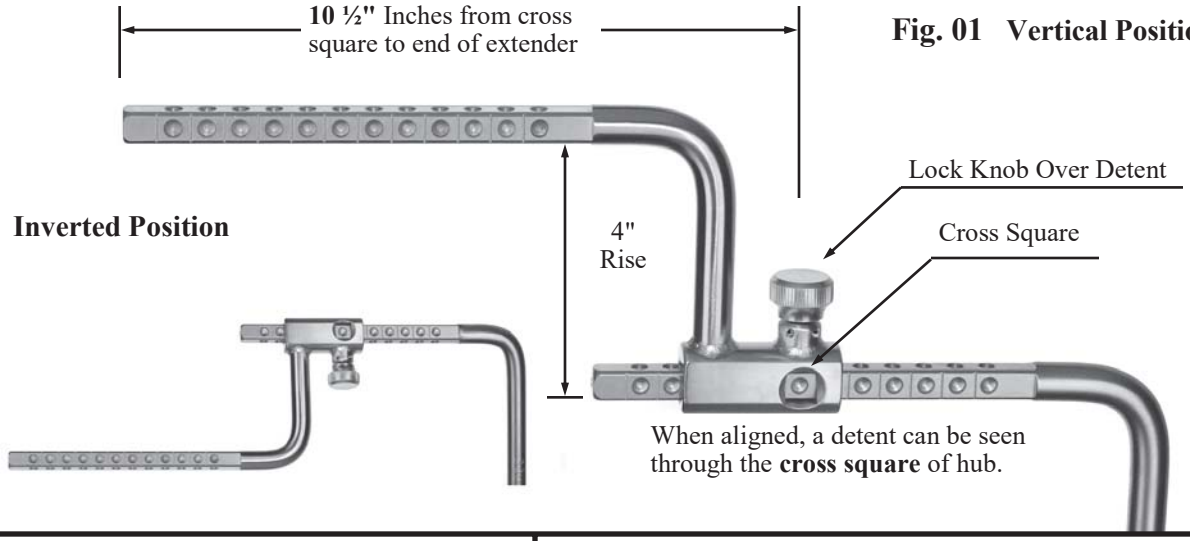

Fig. 01 Vertical Position Thru Hub

Fig. 02 Right Angle Vertical Position Thru Cross Square

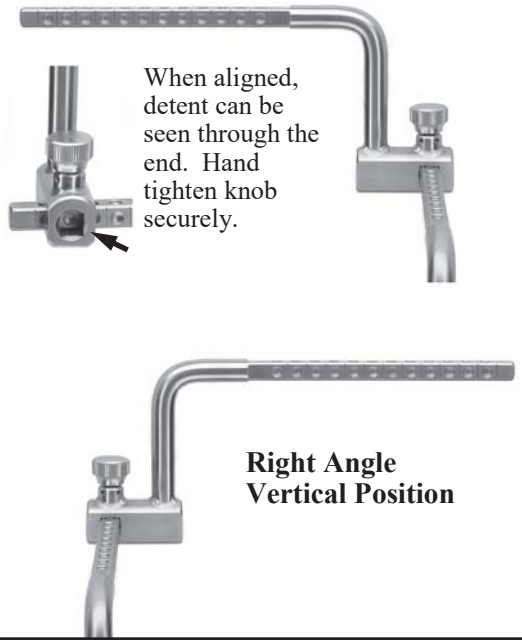

Fig. 03 Horizontal Position Thru Hub

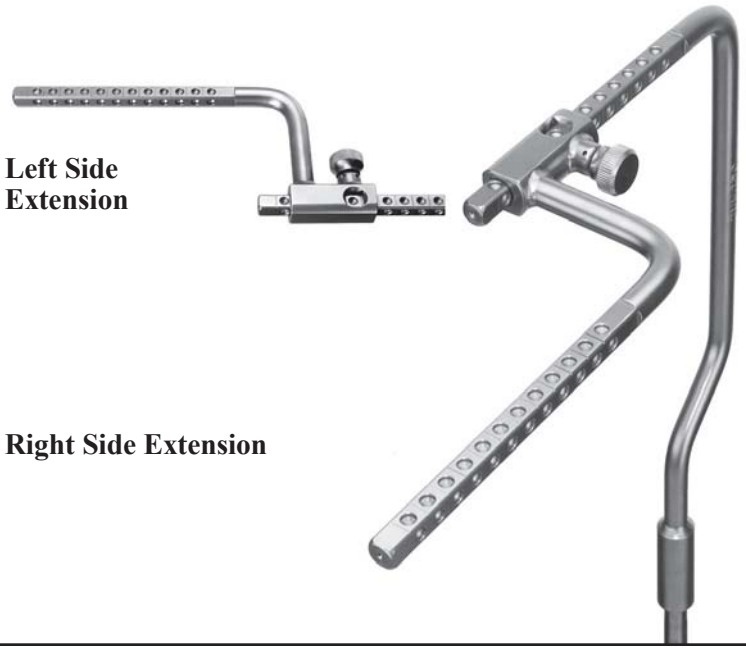

Rultract Inc. 5663 Brecksville Rd. Cleveland, Ohio 44131 U.S.A.
Email: rultract@rultract.com Website: www.rultract.com

Rultract®
SKYHOOK
Surgical Retractor Systems™

STERILE PROCESSING
CLEANING AND STERILIZATION
INSTRUCTIONS
RULTRACT RETRACTOR SYSTEM
SPD INSERVICE

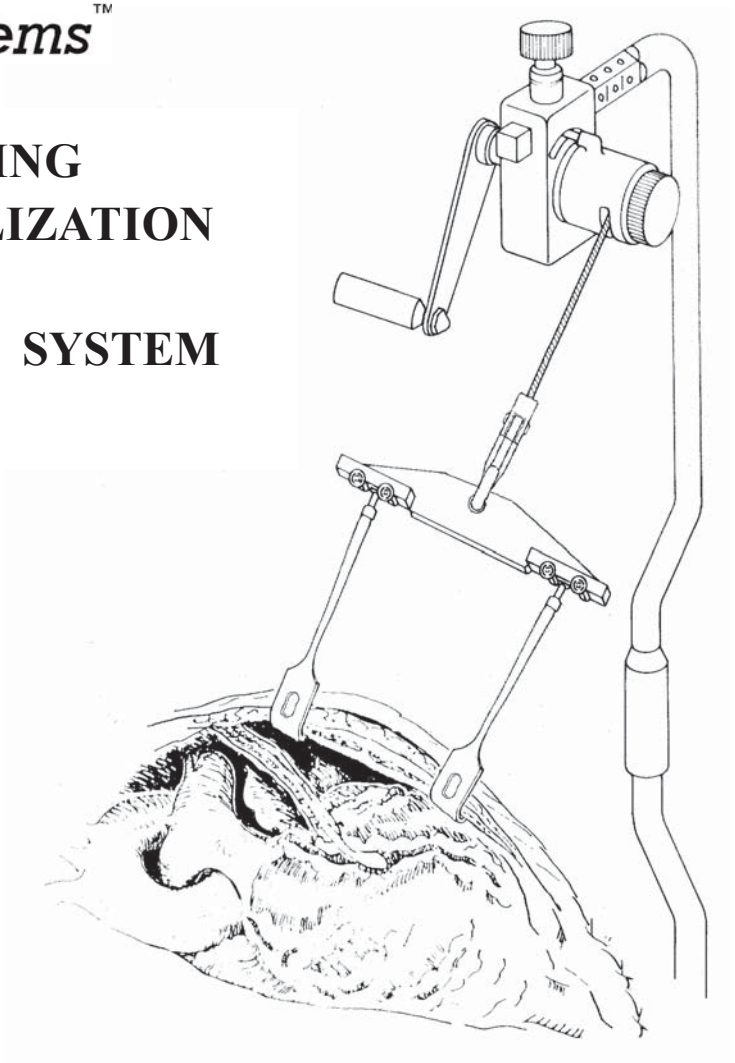

Rultract FDA Information

FDA Establishment:
RULTRACT INC
5663 Brecksville Road
Independence , OH 44131
Registration #: 1530504
FEI Number*: 3000717741
Owner Operator # 10060024
Listing # D345513

Rultract®
SKYHOOK
Simplicity Exchange Service Program
-service made simple-

Rultract *has established a medical industry standard for surgical retraction. The systems provide gentle, uniform lift with maximum exposure.*

For further information contact Rultract® directly at rultract@rultract.com or visit our website, www.rultract.com. Toll Free 888.550.5695.

INDEX	Page
SPD Inservice Introduction	25
Table of Contents	26
Cleaning Instructions & Biocompatibility	27
Disassemble Ratchet Rake for Cleaning Cycle	28-32
Cleaning Instructions / Identify System Components	33-38
Sterilization Guidelines	39-40
Prepare for Sterilization: Inspect all Fasteners for Tightness	41-45

INDEX	Page
Reassemble for Sterilization and use	46-48
Cable Replacement	49-56
Accessories/Replacement Parts	57-58
Contact Information And Repairs	59
Standards of Safe Use Compliance	60
Service Request Form	61
Parts List	62
Warnings Index Proper Servicing and Repair	63

Rultract Inc. 5663 Brecksville Rd. Cleveland, Ohio 44131 U.S.A.
Email: rultract@rultract.com Website: www.rultract.com

CLEANING

RULTRACT® CLEANING INSTRUCTIONS

Cleaning: Rultract® System

Repeated processing has minimal effect on this instrument. End of life is normally determined by wear and damage due to use.

CAUTION: Disassemble unit prior to cleaning. The spool cap nut must be unscrewed to separate the spool, spool cap, crank handle assembly and gearbox assembly. (see page 32)
DO NOT remove fasteners or roll pins for proper cleaning and sterilization.
Further disassembly is not necessary and may void warranty and/or damage the product.

1. Remove excess soil on instrument as soon as is reasonably practical following use.
2. Disassemble Ratchet/Rake per instructions. No disassembly of other products required for cleaning.
3. It is expected that commercially available products for the use of cleaning are used.
4. If using an automated cleaning system (such as a sonicator), use a commercially available detergent approved for automatic use that is ph-neutral or alkaline. Set appropriate wash and rinse cycles according to the manufacturer of the automatic cleaning system's instructions.
5. If cleaning manually, thoroughly clean surface contamination. Soak in a neutral or alkaline pH disinfecting solution or enzymatic cleaner. Do not soak for longer than what is recommended by solution manufacturer.
6. Instrument should be thoroughly rinsed with distilled water after cleaning to remove any residual debris or cleaning agent.
7. Instruments may be lubricated using a small amount of surgical grade lubrication. Let instrument drip dry a few moments before wrapping for sterilization.
8. Visually inspect instrument for any damage prior to use.

Biocompatibility of Rultract's Medical Devices
Rultract uses 420, 304 and 17-4 Stainless Steel in its medical products that would have direct contact with patients

CHECK PAGE NUMBER REFERENCES

Rultract Inc. 5663 Brecksville Rd. Cleveland, Ohio 44131 U.S.A.
Email: rultract@rultract.com Website: www.rultract.com

4100-IMR-6,
Fig. A and Fig. B
is sold as and referred to as:
4100-IMR-41 and 4100-52
as shown in Fig. 01

4100-IMR-6
Fig. A

4100-IMR-6
Fig. B

IN PREPARATION FOR THE CLEANING CYCLE, YOU MUST DISASSEMBLE RATCHET ASSEMBLY, 4100-IMR-41, Fig. 01, AS SHOWN IN Fig. 02

NO FURTHER DISASSEMBLY REQUIRED

Proceed to pages 29-32 for disassembly instructions

Fig. 01

4100-IMR-41
Ratchet Assembly
w/Snap Clip

4100-52
Sternal Rake
Plate
Assembly

Fig. 02

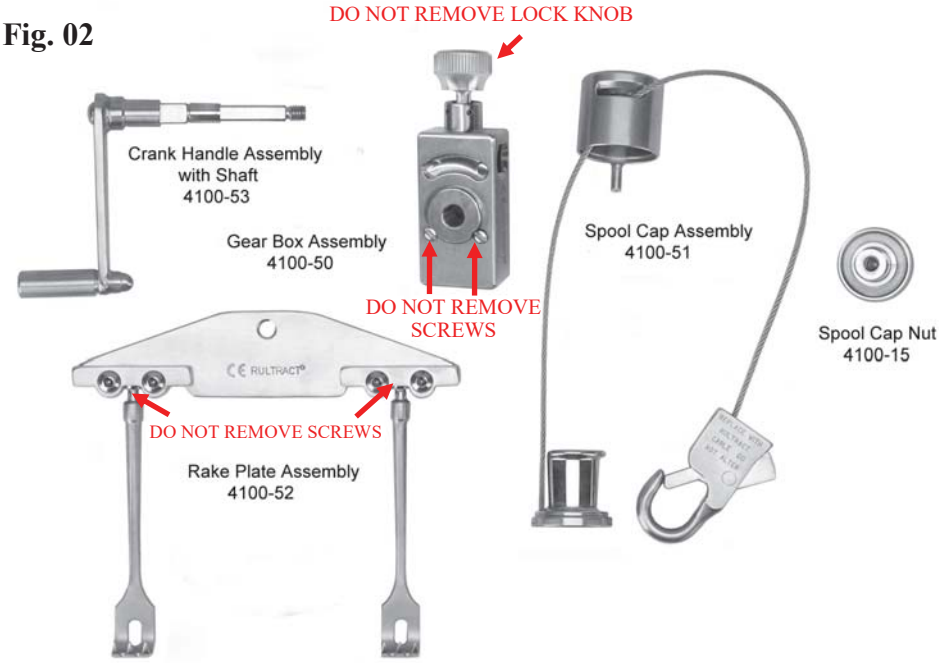

Determine Your Rake Plate System Configuration

STEP 1 RAKE PLATE:

If your system has a Snap Clip and a Rake Plate

Disconnect Rake Plate from Snap Clip

If your system has a Pivot Hub Attached to the Cable and Rake Plate

Do not disassemble Rake Plate from Pivot Hub — Proceed to Step 2

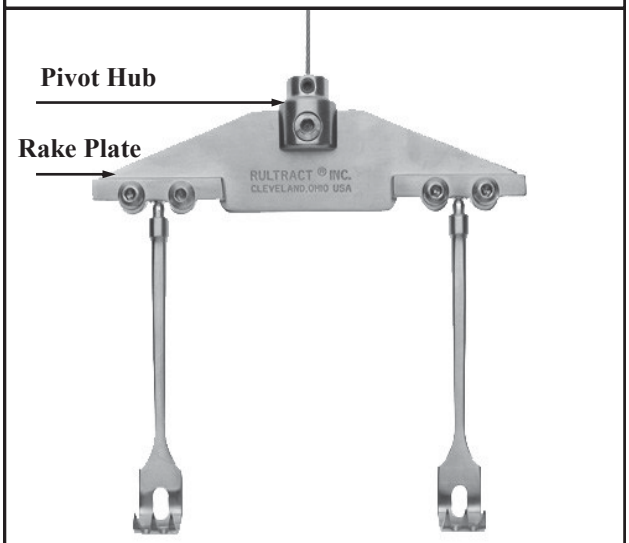

If your system has a Snap Clip Only

Proceed to Step 2

DISASSEMBLE RATCHET ASSEMBLY FOR CLEANING (PAGES 30-32)

4100-IMR-41
Ratchet Assembly
w/Snap Clip

4100-52
Sternal Rake
Plate
Assembly

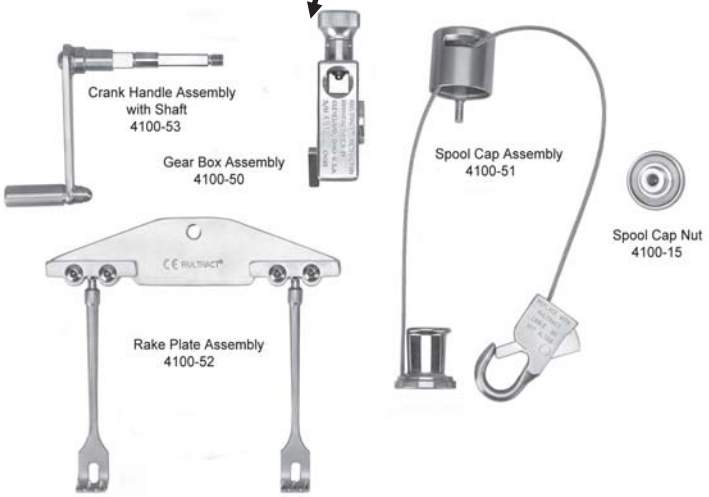

STEP 2 PULL CABLE FROM SPOOL: While holding the Ratchet Assembly by the Spool Cap Assembly, shift Ratchet Lever to reverse direction. (Fig. 01). Pull down on Snap Clip or Rake Plate Assembly **to completely unwind the cable, approximately 16" (Fig. 02).**
If cable is jammed or will not unwind freely, proceed to the next step and remove the Spool Cap Assembly.

Note: Worn or damaged cable must be replaced at this time with a new Rultract® Cable.

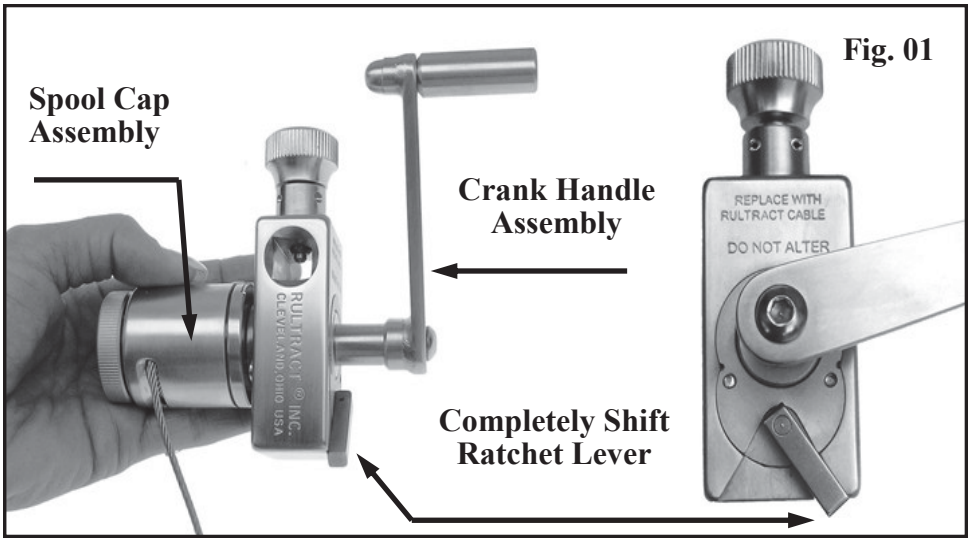

Fig. 01

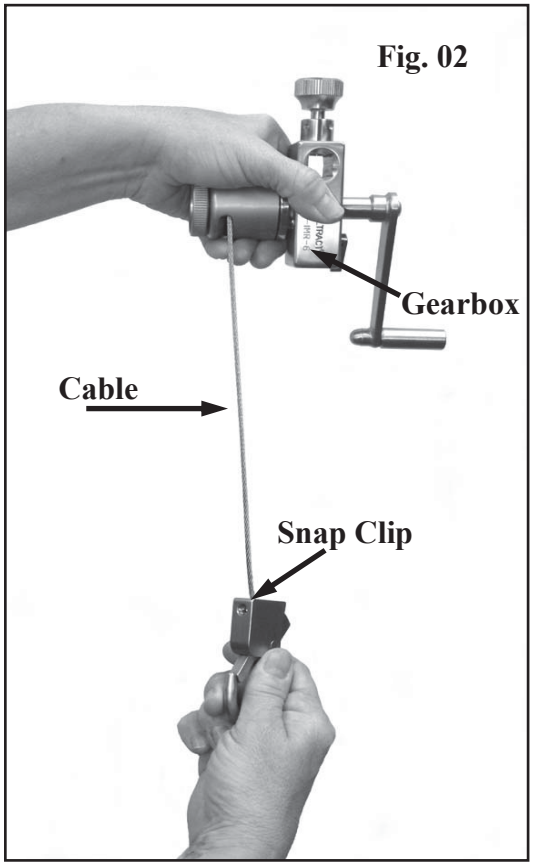

Fig. 02

DISASSEMBLE RATCHET ASSEMBLY FOR CLEANING (continued)

STEP 3 REMOVE SPOOL CAP ASSEMBLY AND CRANK HANDLE ASSEMBLY:
Holding the Crank Handle Assembly as shown, unscrew and remove the Spool Cap Nut using a counter clockwise rotation (Fig. 03 & 04). Slide Spool Cap Assembly from shaft of Crank Handle Assembly (Fig. 05). Slide Crank Handle Assembly out of Gearbox. At this time, note square of shaft and square hole in Gearbox (Fig. 06).

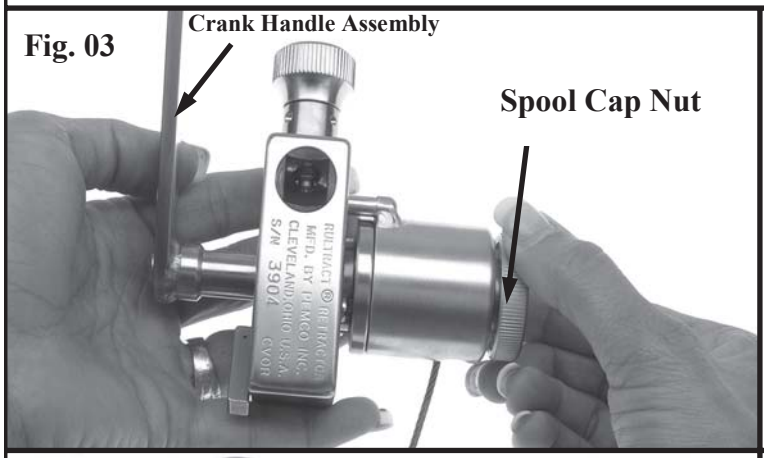

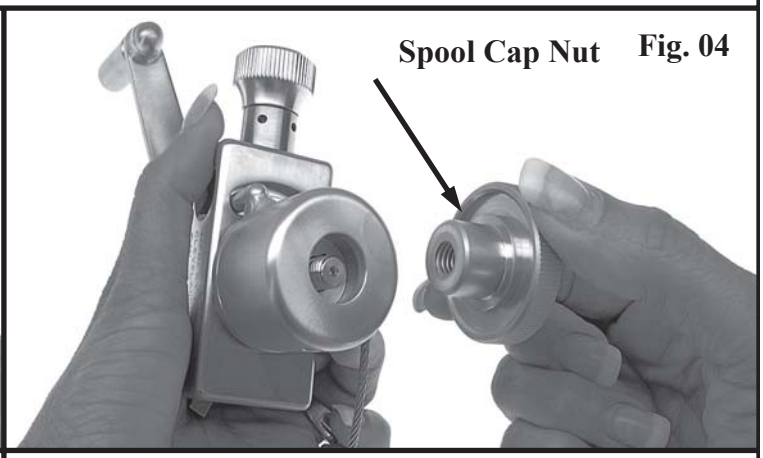

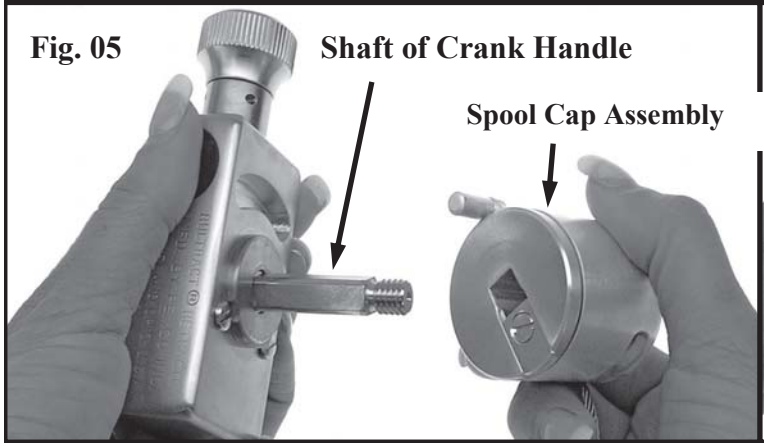

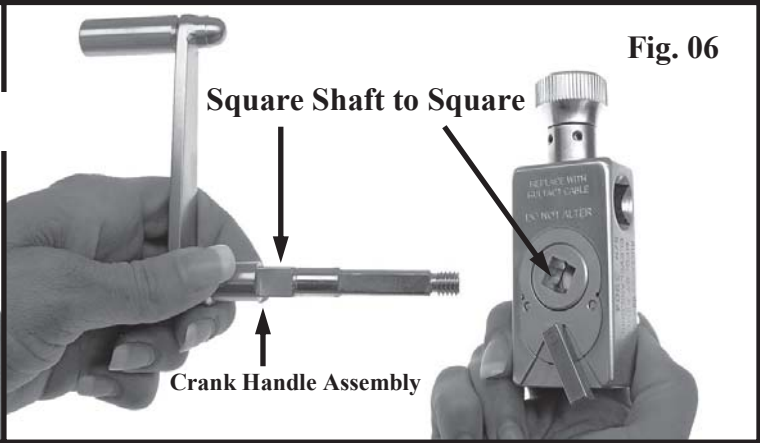

DISASSEMBLE RATCHET ASSEMBLY FOR CLEANING (continued)

STEP 4 SEPARATE SPOOL CAP FROM SPOOL:
To separate Spool Cap from Spool, line up Cable Guide and Pin and Cable Access Plate of Spool. (Fig. 07)

This will align flat on Spool with Cable Guide and allow the two pieces to separate. (Fig. 08)

Fig. 07

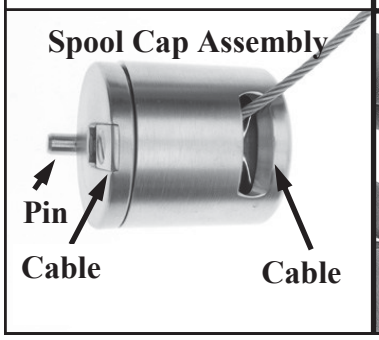

Fig. 08

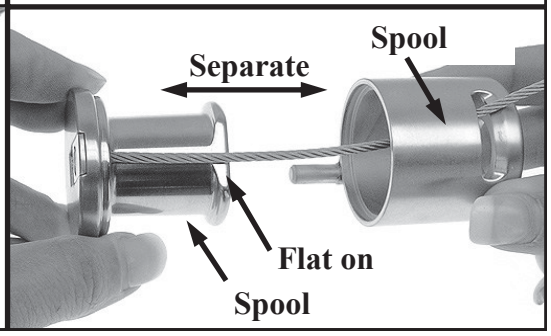

Fig. 09

Slide Spool Cap along cable as shown in (Fig. 09).
Do not disassemble any further than Fig. 11.

The Rultract Ratchet Assembly is now completely disassembled and ready to begin the cleaning cycle

Fig. 11

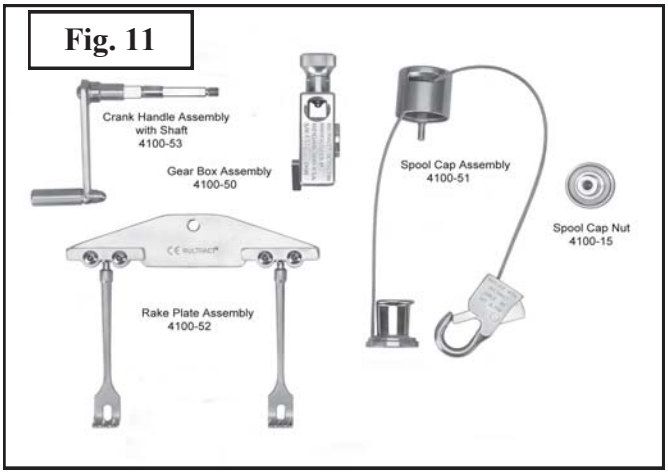

Do not disassemble any further

STEP 5 BACK OUT (OPEN) THE NON-REMOVABLE LOCK KNOB:
The knob should not be open or closed all the way. It should be somewhere in the middle and have some "play" in it. (Fig. 10)

**DO NOT REMOVE THE LOCK KNOB

Fig. 10

Knobs may "freeze" if sterilized in a fully open or closed position.

CAUTION:

Check and tighten all fasteners as indicated on pages 42-46 after the cleaning cycle and prior to sterilization and each use.
Failure to do so may cause components to loosen or disassemble during use

SYSTEM COMPONENTS - RESTERNOTOMY RETRACTORS
PREPARE FOR CLEANING CYCLE

CLEANING: Resternotomy Rake Plates
- **No disassembly required**

Resternotomy Rake Plates:

4100-52RDL	Resternotomy Assist, Large	18mm	Rakes
4100-52RDM	Resternotomy Assist, Medium	12mm	Rakes
4100-52RDS	Resternotomy Assist, Small	8mm	Rakes
4100-52RDH	Resternotomy Assist, Hooks		

CAUTION:

As Indicated on Page 10

CHECK AND TIGHTEN ALL FASTENERS ON THE RAKE PLATE ASSEMBLY AFTER THE CLEANING CYCLE AND PRIOR TO STERILIZATION

4100-52RDL 4100-52RDM 4100-52RDS 4100-52RDH

Do not fully open or close the knobs for sterilization.
Knobs may "freeze" if sterilized in a fully open or closed position.

Rultract FDA Information
FDA Establishment:
RULTRACT INC
5663 Brecksville Road
Independence , OH 44131
Registration #: 1530504
FEI Number*: 3000717741
Owner Operator # 10060024
Listing # D345513

Rultract® SKYHOOK Surgical Retractor Systems

SYSTEM COMPONENTS - TOP POSTS
PREPARATION FOR CLEANING CYCLE

CLEANING: Top Posts

- **No disassembly required**

TOP POSTS*: *Square and Spline inserts

4100-32A	Square Top Post - standard length -	9 ½" x 18" long (square insert)
4100-32AL	Square Top Post - extended length -	9 ½" x 22" long (square insert)
4100-32AP	Offset Square Top Post -	9 ½" x 20" long (square insert)
4100-32AS-02	Spline Top Post - standard length -	9 ½" x 19" long (spline insert)
4100-32ALS	Spline Top Post - extended length -	9 ½" x 23" long (spline insert)

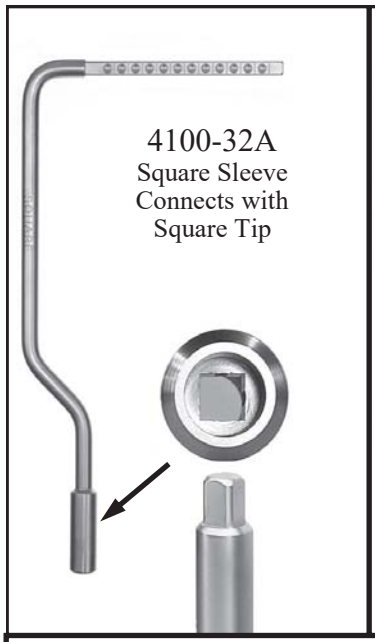

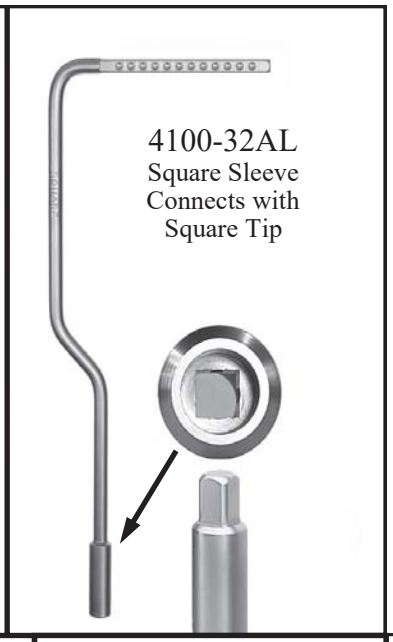

Rultract FDA Information

FDA Establishment:
RULTRACT INC
5663 Brecksville Road
Independence , OH 44131
Registration #: 1530504
FEI Number*: 3000717741
Owner Operator # 10060024
Listing # D345513

Rultract® SKYHOOK
Surgical Retractor Systems

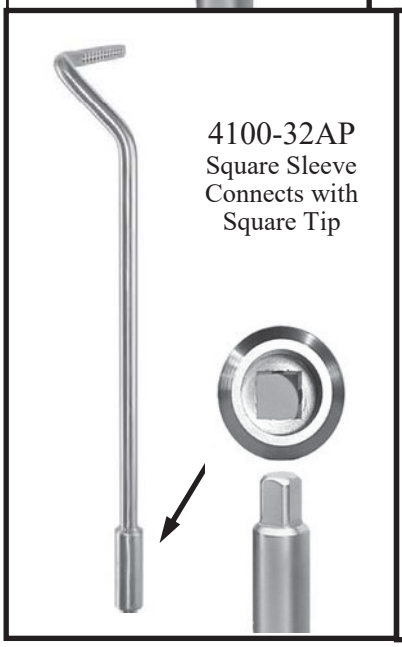

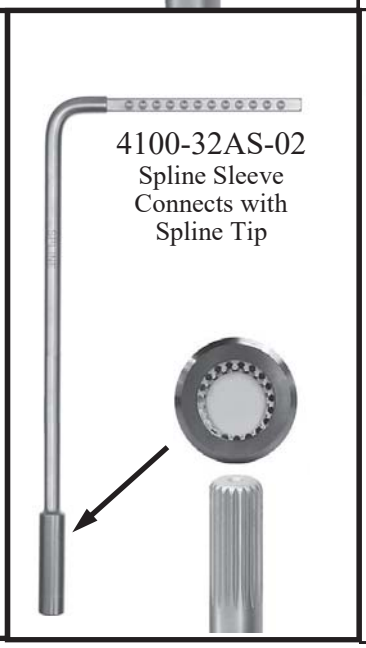

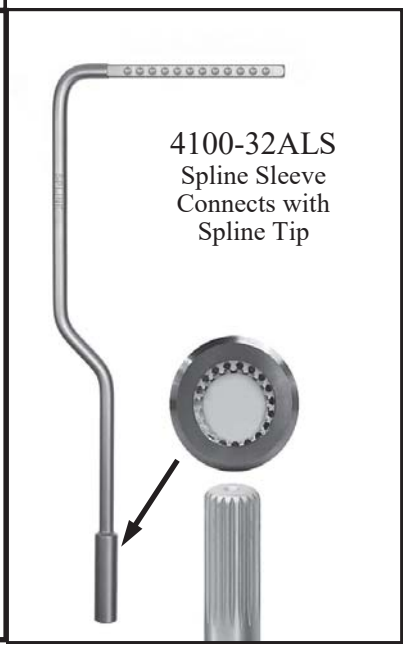

SYSTEM COMPONENTS - ONE PIECE AND TILTING TOP POSTS
PREPARATION FOR CLEANING CYCLE

***ONE PIECE POST*: Round Base**

4100-08 One piece post - 9 ½" x 30" long

CLEANING One Piece Post

- **No disassembly required**

THIS ITEM HAS BEEN DISCONTINUED

4100-08 One Piece Post
No Collar 30" Long

***TILTING TOP POSTS*: Square and Spline inserts**

4100-32AT Square Tilting Top Post - 12 ½" x 20" long

4100-32AST Spline Tilting Top Post - 12 ½" x 21" long

CLEANING Tilting Top Posts

- **No disassembly required.**
- Do not remove retaining screws.**
- Do not open or close handles completely.
- Loosen knobs for partial separation. **Knobs may "freeze" if sterilized in a fully open or closed position.**
- Sections and knobs should have free movement (rotate freely).

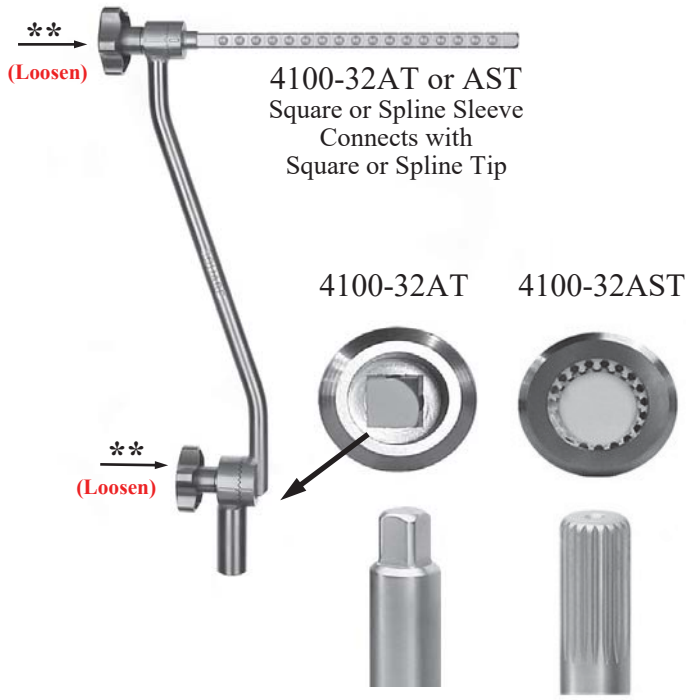

WARNING: Removal of retaining screw(s) (4110P-12) will cause device to come apart. This will result in failure during use.**

DO NOT REMOVE RETAINING SCREWS **

SYSTEM COMPONENTS - POST CLAMPS PREPARATION FOR CLEANING CYCLE

CLAMPS*: *Square and Spline Tip

4150	Square Tip, Double Bend Post/Clamp, Scrub Applied - 19" long
4150S-02	Spline Tip, Single Bend Post/Clamp Scrub Applied - 19" long
4160	Square Tip, Double Bend Post/Clamp, Circulator Applied - 20" long
4160S-02	Spline Tip, Single Bend Post/Clamp, Circulator Applied - 20" long

SQUARE TIP 90° Angle

SPLINE TIP 18° Increments

4150 Scrub Applied

4150S-02 Scrub Applied

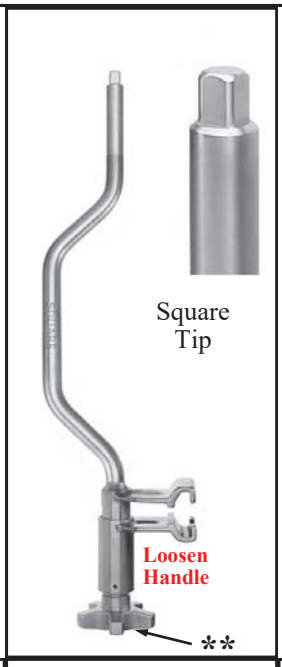

4160 Circulator Applied

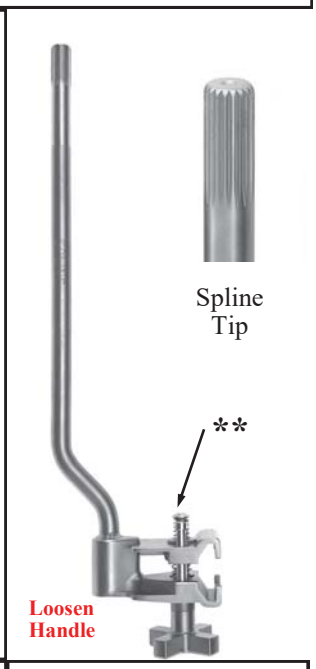

4160S-02 Circulator Applied

CLEANING: Clamp

- **No disassembly required.**
- Do not remove retaining screw.**
- Do not open or close handles completely.
- Jaws should be partially opened. Jaws and handles should have free movement. (open and close & rotate freely)

Handles may "freeze" if sterilized in a fully open or closed position.

Rultract FDA Information
FDA Establishment:
RULTRACT INC
5663 Brecksville Road
Independence , OH 44131
Registration #: 1530504
FEI Number*: 3000717741
Owner Operator # 10060024
Listing # D345513

Rultract® SKYHOOK Surgical Retractor Systems

WARNING: Removal of retaining screw(s) (4110P-12) will cause device to come apart. This will result in failure during use.**

DO NOT REMOVE RETAINING SCREWS **

SYSTEM COMPONENTS - BOTTOM POSTS AND COMBINATIONS CLAMPS
PREPARATION FOR CLEANING CYCLE

BOTTOM POSTS: ***Square and Spline Tip***

4100-32C	Square Tip Bottom Post w/ collar - 5/8" Dia. x 20" long
4100-32CS	Spline Tip Bottom Post w/ collar - 5/8" Dia. x 20" long
4100-28C	Square Tip Double Bend Bottom Post - 5/8" Dia. x 18" long
4100-28CP	Offset Square Tip Bottom Post - 5/8" Dia. x 20" long
4100-28CS-02	Spline Tip Single Bend Bottom Post - 5/8" Dia. x 18" long

CLEANING Bottom Posts

- **No disassembly required.**

4100-32C

DISCONTINUED ITEM

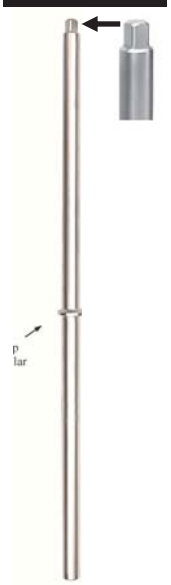

4100-32CS

DISCONTINUED ITEM

4100-28CP

4100-28C

4100-28CS-02

CLEANING: Clamp

- **No disassembly required.**
- Do not remove retaining screw.**
- Do not open or close handles completely.
- Jaws should be partially opened. Jaws and handles should have free movement. (open and close & rotate freely)

Handles may "freeze" if sterilized in a fully open or closed position.

WARNING: Removal of retaining screw(s) (4110P-12) will cause device to come apart. This will result in failure during use.**

DO NOT REMOVE RETAINING SCREWS **

SYSTEM COMPONENTS - EXTENDER BARS	PREPARATION FOR CLEANING CYCLE
• **No disassembly required.** • Do not remove retaining roll pins* or screw. ** • Back out (open) the non-removable Lock Knob	• Loosen knob for partial separation. (DO NOT OPEN OR CLOSE ALL THE WAY) • Knobs may "freeze" if sterilized in a fully open or closed position.

Loosen Lock Knob for partial separation. (DO NOT OPEN OR CLOSE ALL THE WAY)

4100-39S

Extender Bar with Cross Square
(6 1/2" extension from cross square to end of extender)

Loosen Lock Knob for partial separation. (DO NOT OPEN OR CLOSE ALL THE WAY)

4100-39R

Riser Extender Bar with Cross Square
(4" rise and 10 1/2" extension from cross square to end of extender)

Loosen Knob for partial separation. (DO NOT OPEN OR CLOSE ALL THE WAY)

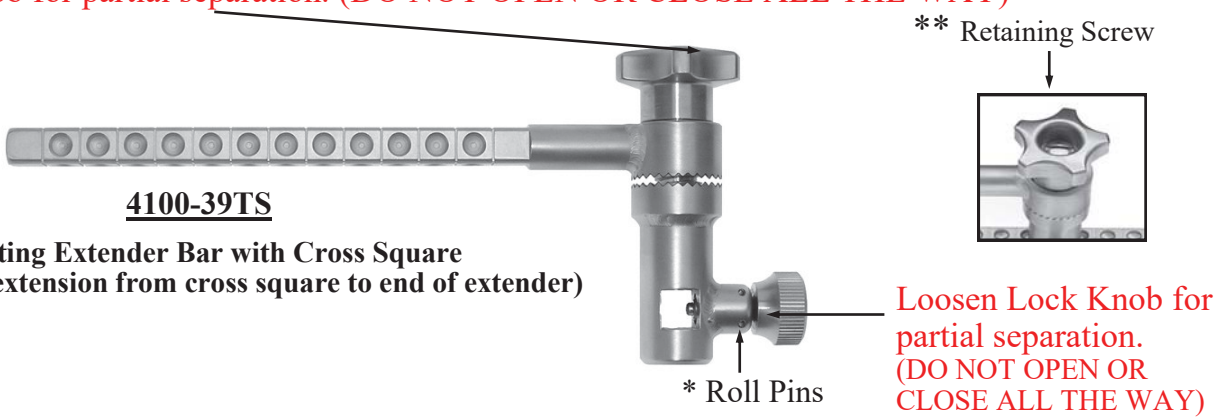

4100-39TS

Rotating Extender Bar with Cross Square
(2" rise w/ 9" extension from cross square to end of extender)

Knobs may "freeze" if sterilized in a fully open or closed position.

Once the Ratchet Assembly has been disassembled and all of the components have completed the cleaning cycle, Rultract recommends that the Ratchet Assembly be reassembled prior to sterilization.

Please refer to pages 47-49 for reassembly instructions.

RULTRACT® INSTRUCTIONS: AFTER CLEANING CYCLE - PREPARE FOR STERILIZATION

STERILIZATION

The following are GUIDELINES for product sterilization.

The Rultract® retractor assembly is a reusable instrument. It is supplied non-sterile and must be cleaned and sterilized prior to initial use and all subsequent use.

This validated process should be considered as a guideline only. Time, temperature and other conditions required for sterilization may vary according to type of sterilizer, cycle design, wrapping material, and/or other hospital practices.

Sterilization containers must be validated by their manufacturer for use in sterilization process. Validated cycles should be indicated in the container's Instructions for Use.

You must validate your own sterilization practice when it differs from the Instructions for Use provided by the device, container or sterilizer manufacturer.

RULTRACT® INSTRUCTIONS FOR USE—STERILIZATION PARAMETERS

Guidelines for Sterilization :

CAUTION: Reassemble prior to sterilization. See pages 47-49.

Cable should be wound on spool prior to sterilization leaving approximately 1 1/2 to 2 inches exposed.

The instruments may be sterilized by the following steam sterilization methods: Prevacuum and steam (gravity) wrapped or by using a rigid container system.

The following cycles were verified utilizing a combination of wrapped metal instruments or metal instruments in a common rigid container system with a mass up to 40 pounds (18 kg).

The wrapped instruments were wrapped with non-woven single use Steriwrap™.

Option 1: Wrapped Instruments or Instruments in Rigid Container System:

Pre-vacuum Sterilization Parameters
(Minimum time and temperature):
Temperature 132°C (270°F)
Exposure Time 4 minutes
Drying Time 30 minutes

Option 2: Wrapped Instruments or Instruments in Rigid Container System:

Steam (Gravity) Sterilization Parameters
(Minimum time and temperature):
Temperature 121° C (250°F)
Exposure Time 30 minutes
Drying Time 30 minutes

DO NOT remove fasteners or roll pins for cleaning and sterilization.

RULTRACT® INSTRUCTIONS: AFTER CLEANING CYCLE - PREPARE FOR STERILIZATION

CAUTION:

Check and tighten all fasteners on the Ratchet/Rake Assembly.

Failure to do so may cause components to loosen or disassemble during use.

<u>The following two items should not be removed.</u>
If these fasteners are removed a bolt retaining compound must be reapplied.

** 1 pc. 4100P-08 Crank Arm Screw to mount Crank Arm to Ratchet Shaft.

** 1 pc. 4100-18 Crank Handle Screw to mount Crank Handle to Crank Arm.

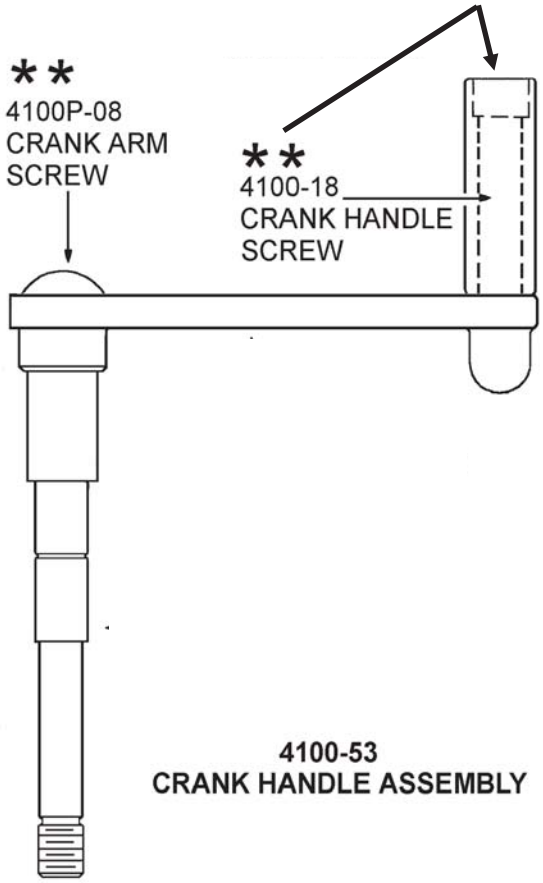

RATCHET ASSEMBLY & RAKE PLATE FASTENERS:

CAUTION:

CHECK AND TIGHTEN ALL FASTENERS ON THE RATCHET ASSEMBLY & RAKE PLATE AFTER THE CLEANING CYCLE AND PRIOR TO STERILIZATION

FAILURE TO DO SO MAY CAUSE COMPONENTS TO LOOSEN OR DISASSEMBLE DURING USE

Cover Plate Screws retain the Cover Plate on the Gearbox.

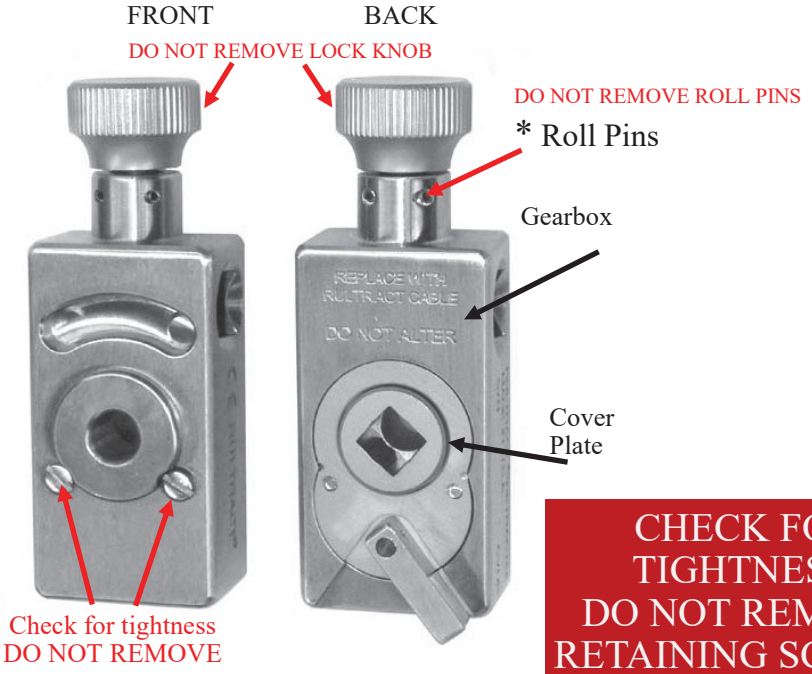

CHECK FOR TIGHTNESS.
DO NOT REMOVE RETAINING SCREWS

Rake Clamp Screws to mount Rake Clamps to Rake Plate

DO NOT REMOVE SCREWS

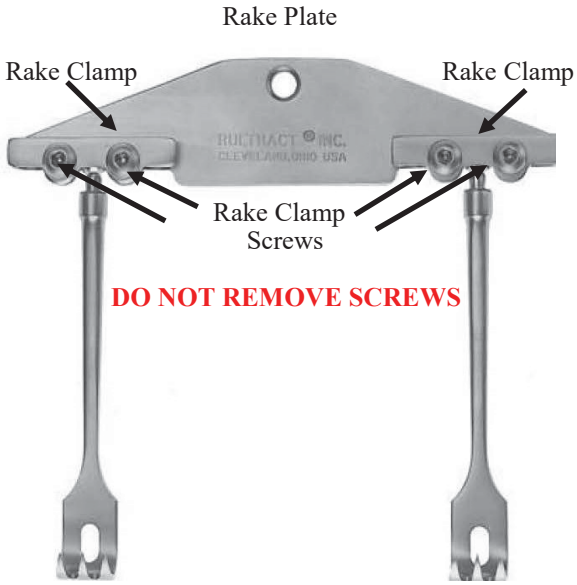

DO NOT REMOVE SCREWS

Rultract FDA Information

FDA Establishment:
RULTRACT INC
5663 Brecksville Road
Independence , OH 44131
Registration #: 1530504
FEI Number*: 3000717741
Owner Operator # 10060024
Listing # D345513

Rultract® SKYHOOK Surgical Retractor Systems

RULTRACT® INSTRUCTIONS: AFTER CLEANING CYCLE - PREPARE FOR STERILIZATION

FASTENERS: CAUTION:
CHECK AND TIGHTEN ALL FASTENERS
ON THE FOLLOWING COMPONENTS
AFTER THE CLEANING CYCLE AND PRIOR TO STERILIZATION.

FAILURE TO DO SO MAY CAUSE COMPONENTS TO LOOSEN OR DISASSEMBLE DURING USE

RULTRACT IFU SYSTEM COMPONENTS - PREPARE FOR STERILIZATION

DO NOT REMOVE RETAINING SCREWS

Sterilization: Clamp
- Do not disassemble for cleaning or sterilization.
- Do not remove retaining screw (s).**
- Do not open or close handle (s) completely.
- Jaws should be partially opened.
- Jaws and handles should have free movement.

Sterilization: Tilting Top Posts and Rotating Extender Bar
- Do not disassemble for cleaning or sterilization.
- Do not remove retaining screw (s).**
- Do not open or close knobs completely.
- Loosen knobs for partial separation.
- Sections and knobs should have free movement.

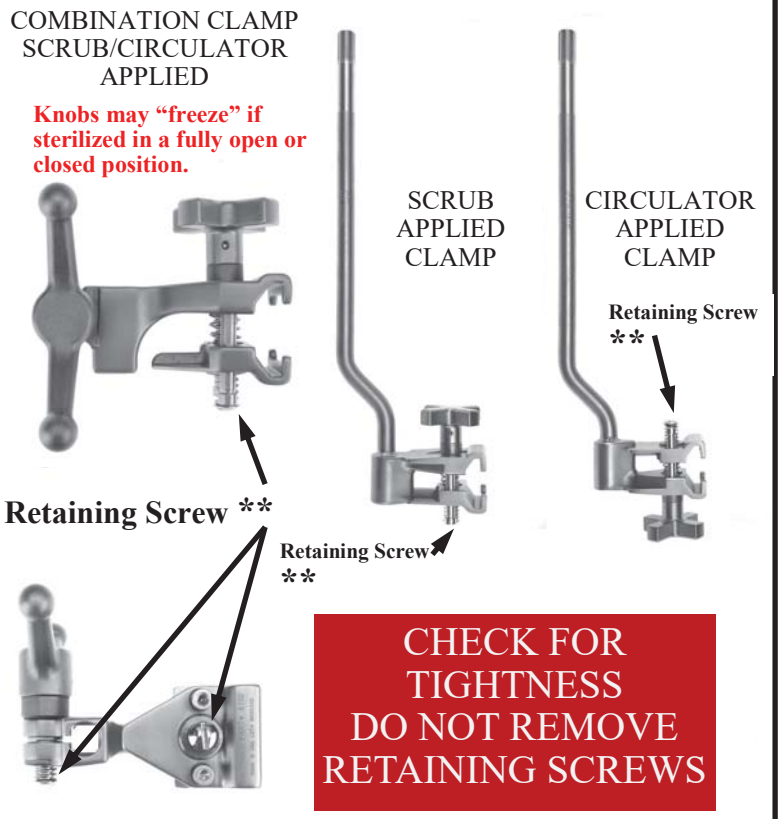

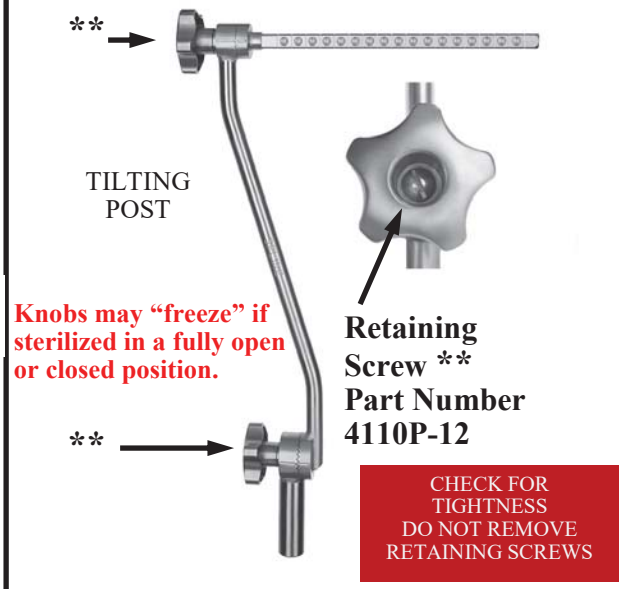

Rultract FDA Information
FDA Establishment:
RULTRACT INC
5663 Brecksville Road
Independence , OH 44131
Registration #: 1530504
FEI Number*: 3000717741
Owner Operator # 10060024
Listing # D345513

Rultract® SKYHOOK Surgical Retractor Systems

WARNING: **Removal of retaining screw (s)** (4110P-12) will cause device to come apart. This will result in failure during use.**

Tightening Knobs may "freeze" if sterilized in a fully open or closed position.

SPOOL CAP ASSEMBLY FASTENERS:

CHECK FOR TIGHTNESS AFTER THE CLEANING CYCLE AND PRIOR TO STERILIZATION

** 1 pc. 4100-15 Spool Cap Nut to retain Spool Cap Assembly.
** 1 pc. 4100P-11 Cable Access Plate Screw to retain Cable Access Plate.

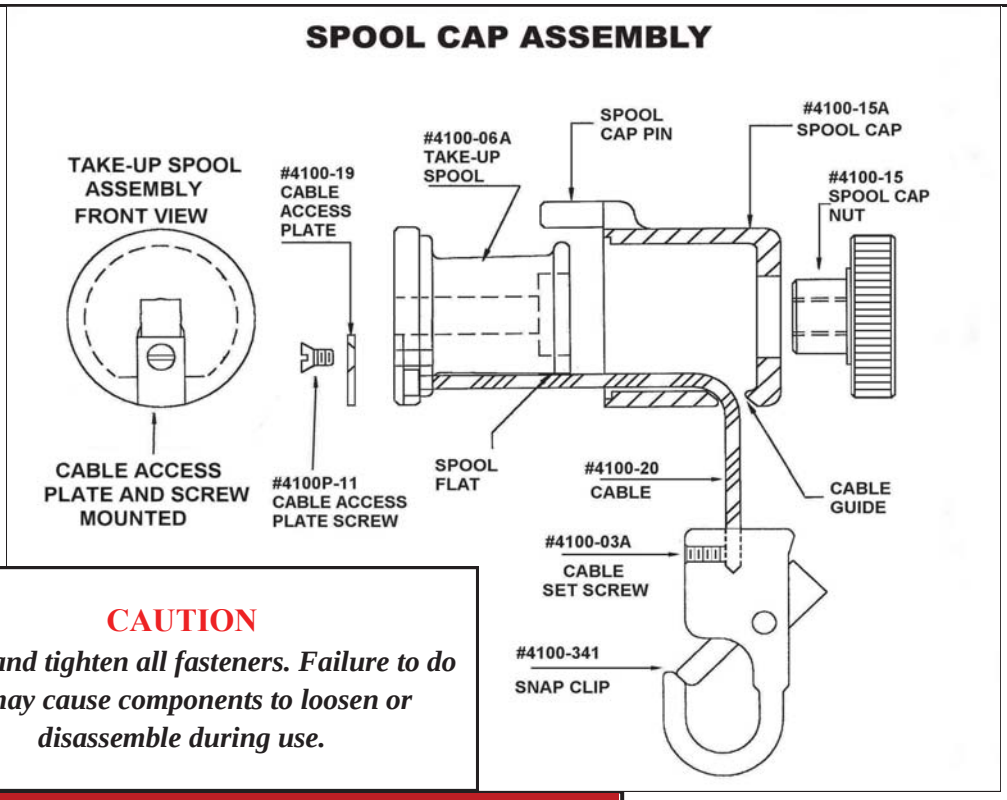

CAUTION

Check and tighten all fasteners. Failure to do so may cause components to loosen or disassemble during use.

CHECK ALL RAKE CLAMP SCREWS FOR TIGHTNESS. DO NOT REMOVE.

4100-52RDL 4100-52RDM 4100-52RDS 4100-52RDH

STERILIZATION: Resternotomy Rake Plates

- **No disassembly required**

- Do not disassemble for cleaning or sterilization.
- Do not remove Rake Clamp screws.**
- Do not open or close knobs completely.
- Sections and knobs should have free movement.

Knobs may "freeze" if sterilized in a fully open or closed position.

**** DO NOT REMOVE RAKE CLAMP SCREWS ****

RULTRACT® INSTRUCTIONS: AFTER CLEANING CYCLE - PREPARE FOR STERILIZATION
EXTENDER BARS

- **No disassembly required.**
- Do not remove retaining roll pins* or screw. **
- Back out (open) the non-removable Lock Knob

- Loosen knob for partial separation. (DO NOT OPEN OR CLOSE ALL THE WAY)
- Knobs may "freeze" if sterilized in a fully open or closed position.

Loosen Lock Knob for partial separation. (DO NOT OPEN OR CLOSE ALL THE WAY)

4100-39S

Extender Bar with Cross Square
(6 1/2" extension from cross square to end of extender)

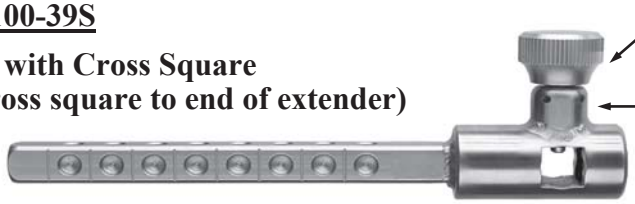

Loosen Lock Knob for partial separation. (DO NOT OPEN OR CLOSE ALL THE WAY)

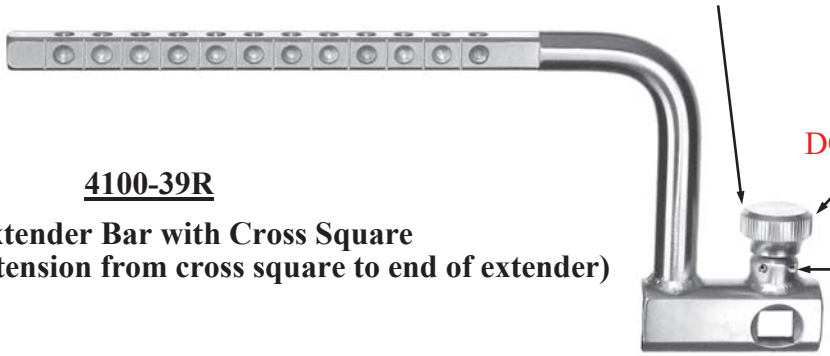

4100-39R

Riser Extender Bar with Cross Square
(4" rise and 10 1/2" extension from cross square to end of extender)

Loosen Knob for partial separation. (DO NOT OPEN OR CLOSE ALL THE WAY)

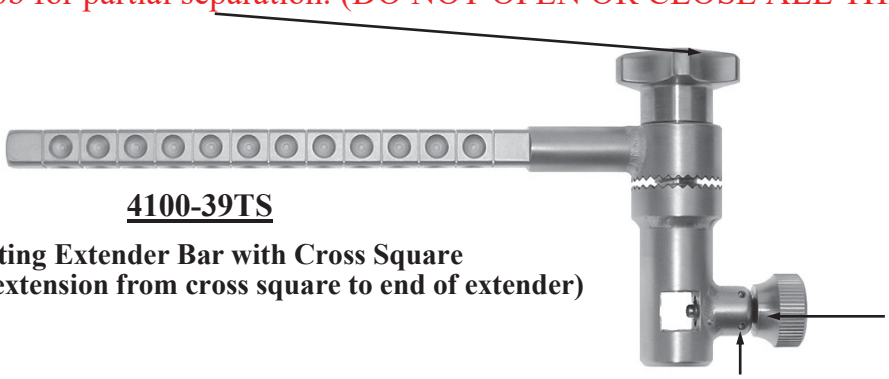

4100-39TS

Rotating Extender Bar with Cross Square
(2" rise w/ 9" extension from cross square to end of extender)

Knobs may "freeze" if sterilized in a fully open or closed position.

RULTRACT® INSTRUCTIONS:
AFTER CLEANING CYCLE - PREPARE FOR STERILIZATION

IN PREPARATION FOR STERILIZATION, YOU MUST REASSEMBLE <u>RATCHET ASSEMBLY, 4100-IMR-41, (Fig. 01)</u>, AS SHOWN IN Fig. 02

Proceed to pages 47-49 for assembly instructions

Fig. 01

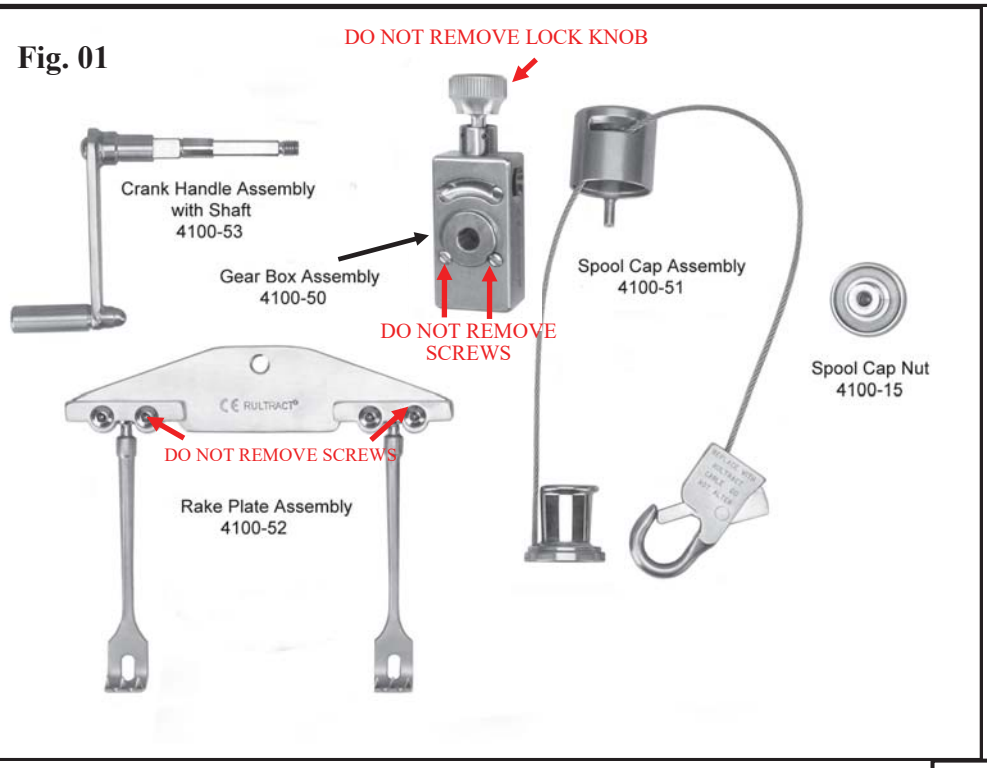

REASSEMBLE THIS

TO THIS

Fig. 02

4100-IMR-41
Ratchet Assembly w/Snap Clip

4100-52
Sternal Rake Plate Assembly

Rultract FDA Information

FDA Establishment:
RULTRACT INC
5663 Brecksville Road
Independence , OH 44131
Registration #: 1530504
FEI Number*: 3000717741
Owner Operator # 10060024
Listing # D345513

Rultract® SKYHOOK Surgical Retractor Systems

REASSEMBLE RATCHET FOR STERILIZATION AND USE

STEP 1
INSTALL CRANK HANDLE:

Slide the shaft of Crank Handle into square hole of Gearbox located above the Ratchet Lever (Fig. 01). Note: Both squared sections of the shaft must be completely inserted and flush in gearbox (Fig. 02).

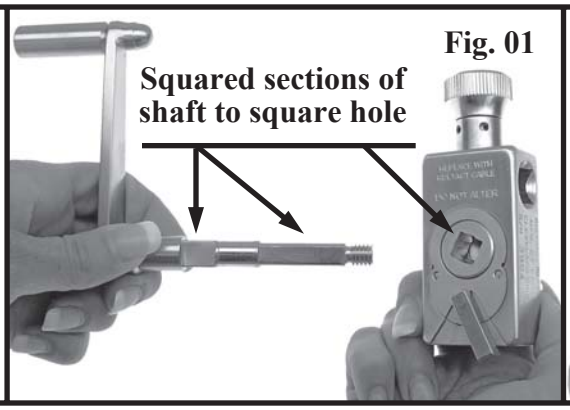

Fig. 01

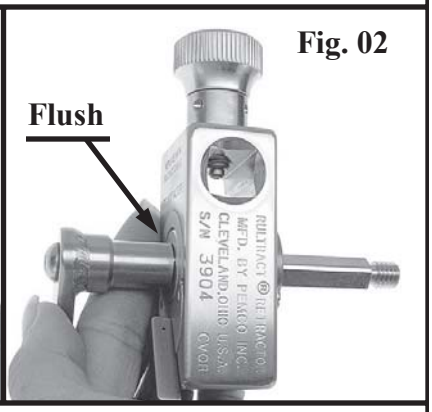

Fig. 02

STEP 2 REASSEMBLE SPOOL AND SPOOL CAP: Align the Cable Guide with the flat surface of the Spool (Fig. 03). Slide Spool and Spool Cap together (Fig. 04).

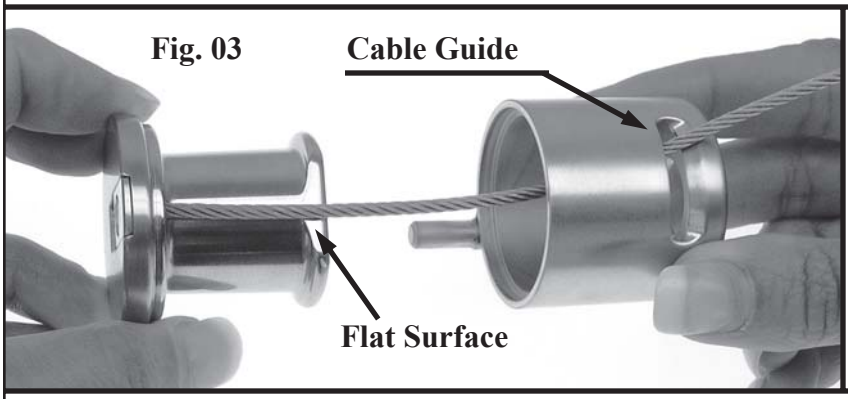

Fig. 03

Fig. 04

Spool and Spool Cap Assembled

STEP 3 SPOOL CAP ASSEMBLY: While holding the Gearbox and Crank Handle together, line up Spool Cap Pin with the groove in the Gearbox. Slide the Spool Cap Assembly onto the shaft (Fig. 05).
Spool Cap Pin must be inserted into groove of Gearbox. While holding Crank Handle Assembly and Gearbox firmly, screw the Spool Cap Nut onto the shaft by turning clockwise. **Hand tighten securely (Fig. 06).**

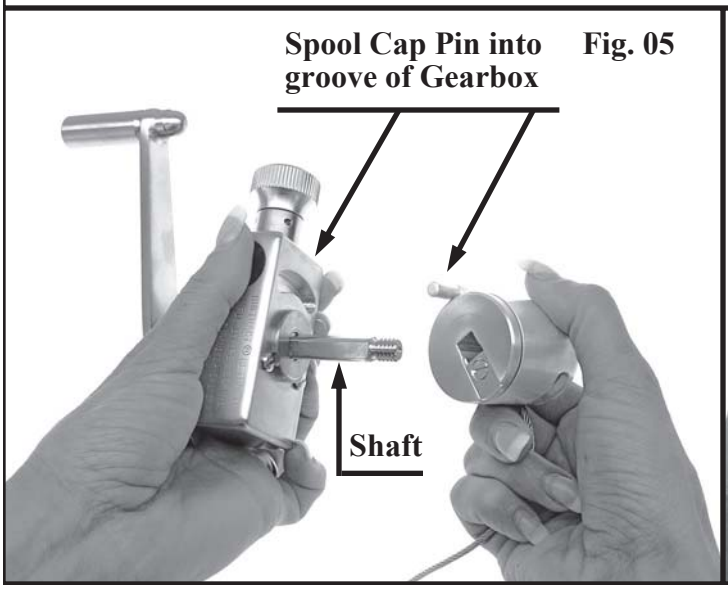

Fig. 05

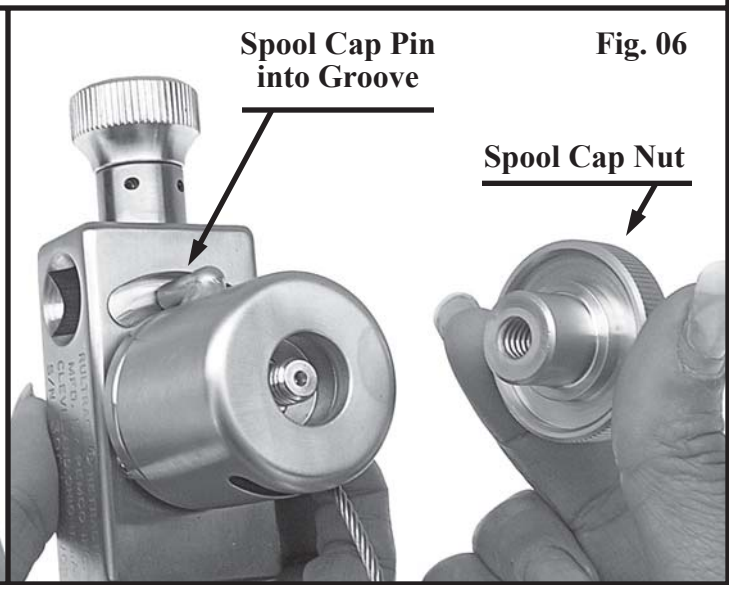

Fig. 06

REASSEMBLE RATCHET ASSEMBLY FOR STERILIZATION AND USE (STEPS 4 AND 5)

STEP 4 TEST WINDING FUNCTION:
Allow Rake Plate or Snap Clip to hang freely. Weight of Rake Plate or Snap Clip allows for proper alignment of Cable on Spool. Total length of exposed, unwound Cable is approximately 18 inches (Fig. 25). Note: Leave one to two inches of Cable exposed to prevent flexing of Cable on Cable Guide at insertion site (Fig. 26). This position protects the Cable from kinking and allows gas or steam to penetrate during sterilization.

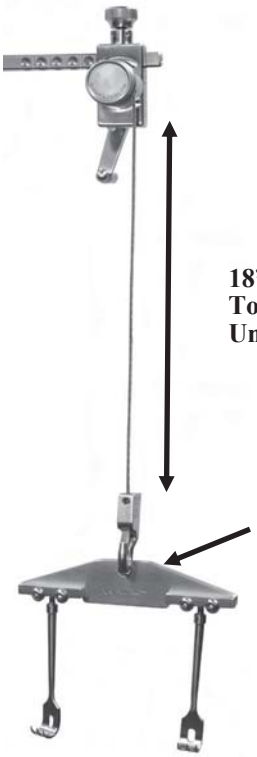

Fig. 25

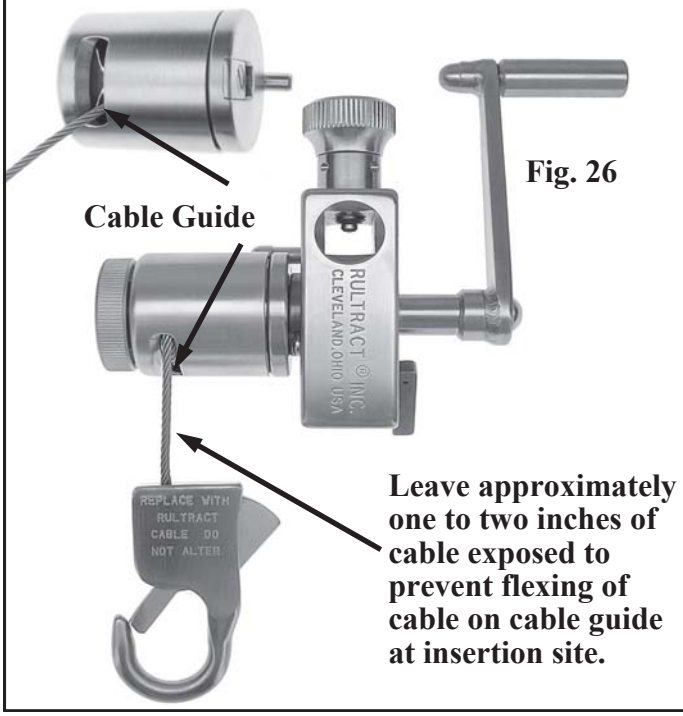

Fig. 26

STEP 5 BACK OUT (OPEN) THE NON-REMOVABLE LOCK KNOB:

The knob should not be open or closed all the way. It should be somewhere in the middle and have some “play” in it (Fig. 27).
Knob may “freeze” if sterilized in a fully open or closed position.

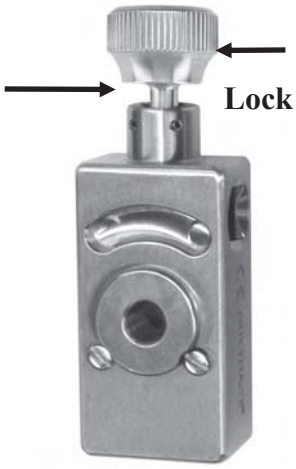

Fig. 27

** DO NOT REMOVE THE LOCK KNOB **

ATTEMPTING TO REMOVE THE LOCK KNOB WILL DAMAGE THE GEARBOX AND IT WILL REQUIRE FACTORY SERVICE TO REPAIR

The Rultract Ratchet Assembly is now completely reassembled and ready for sterilization and use

REASSEMBLE RATCHET FOR STERILIZATION AND USE

WARNING:

** Cables worn or damaged through mishandling must be replaced with a new Rultract® Cable.

** Do not attempt to repair, cut, alter or modify the Cable in any way.

** Cutting and reattaching the Cable will cause it to weaken and fray.

** This will result in failure during use and can lead to serious injury or death.

Note: Worn or Damaged cable must be replaced with a new Rultract® Cable.

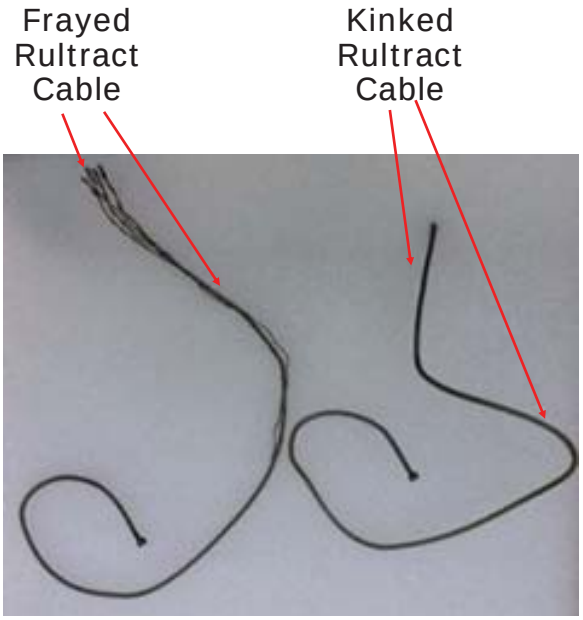

Frayed and Kinked cables will cause the Rultract to bind up and not wind/ unwind properly

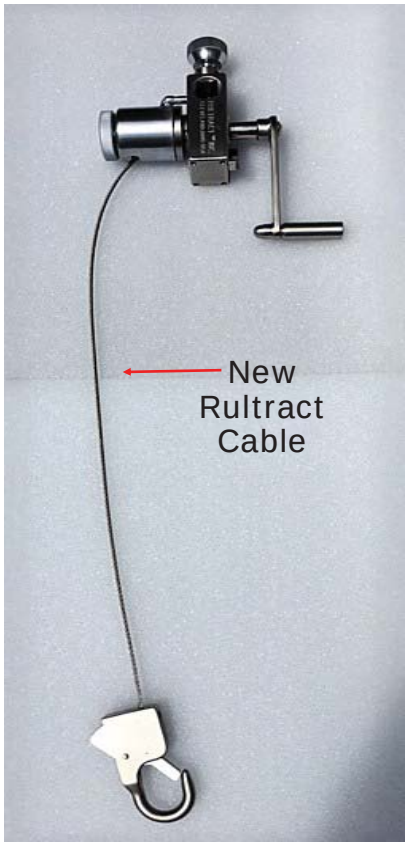

RULTRACT® RETRACTOR CABLE REPLACEMENT INSTRUCTIONS

Rultract, Inc. is the ONLY authorized service center in the U.S.A.

When your Rultract® instrument needs repair or service, contact Rultract Inc. at service@rultract.com. **All instruments must be decontaminated before being returned for service.** Repair charges will apply to instruments repaired outside the warranty.

Any modification or alteration by user or unauthorized service vendor is potentially dangerous, could put the hospital, operating room staff and patient at risk, and can lead to serious injury or death.

SERVICE INTERVAL: Complete factory service of your Rultract Skyhook Retractor System (including a cable change)

****If using a surgical device tracking system to track cases, i.e. Censitrac: 400 cases.**

****If not using a surgical device tracking system to track cases, i.e. Censitrac: Every 12-24 months dependent on frequency of use.**

WARNING: Cables worn or damaged through mishandling ***prior to the factory service interval***, must be replaced with a **new Rultract® cable**. Do not attempt to repair, cut, alter or modify the cable in any way. **Cutting and reattaching the cable will cause it to weaken and fray. This can result in failure during use and can lead to serious injury or death.**

HANDLING OF RULTRACT® RETRACTOR

The Rultract Retractor System uses An OEM specific cable which holds the Snap Clip and Rake Plate. If the proper OEM pieces are not used and the pieces are not serviced in regular intervals by a factory trained technician, they could separate during surgery possibly causing serious injury or death.

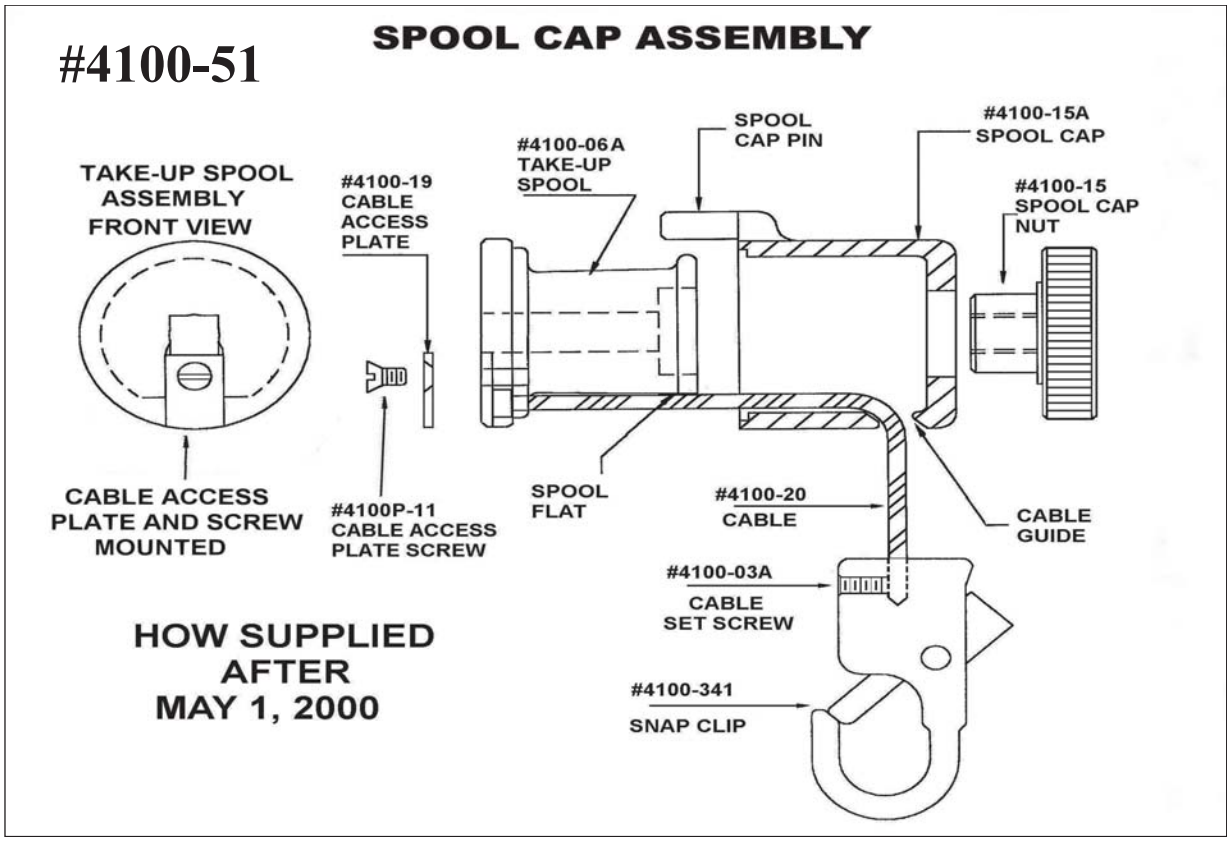

Determine Your Rake Plate System Configuration

STEP 1 RAKE PLATE:

If your system has a Snap Clip and a Rake Plate

Disconnect Rake Plate from Snap Clip

If your system has a Pivot Hub Attached to the Cable and Rake Plate

Do not disassemble Rake Plate from Pivot Hub — Proceed to Step 2

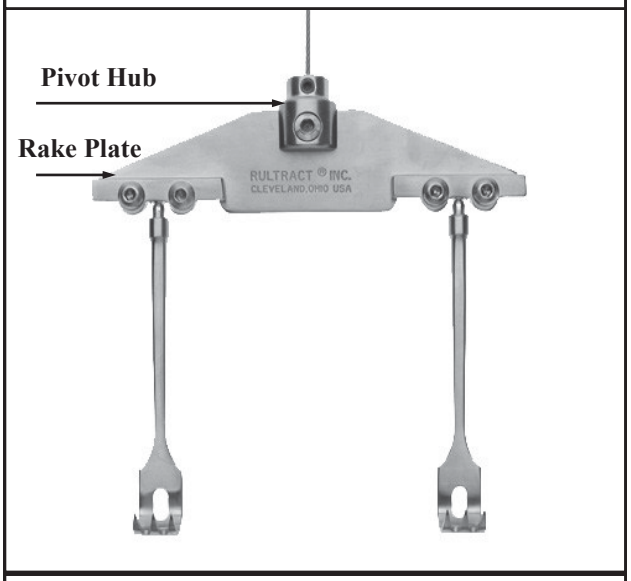

If your system has a Snap Clip Only

Proceed to Step 2

STEP 1 PULL CABLE FROM SPOOL: While holding the Ratchet by the Spool Cap Assembly, shift Ratchet Lever to reverse direction (Fig. 01). Pull down on Snap Clip or Rake Plate Assembly **to completely unwind the cable, approximately 16" (Fig. 02).** If cable is jammed or will not unwind freely, proceed to the next step and remove the Spool Cap Assembly. **Note: Worn or Damaged cable must be replaced at this time with a new Rultract® Cable.**

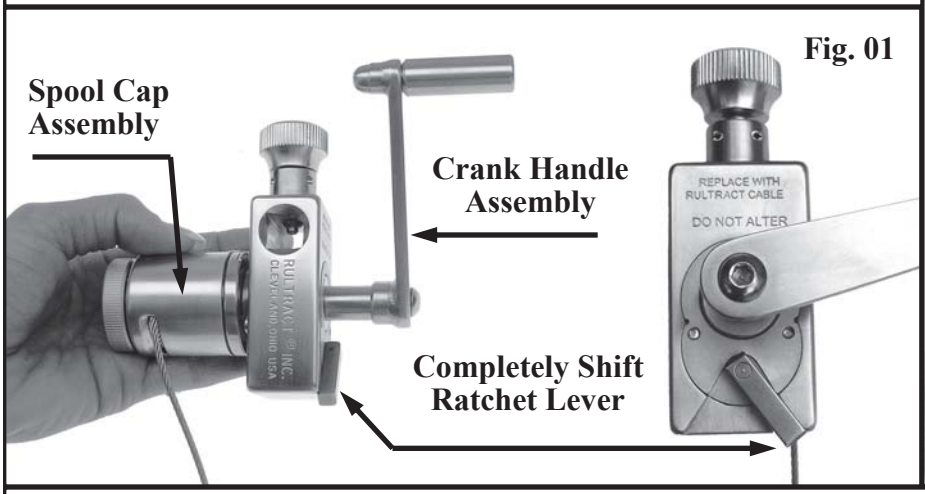

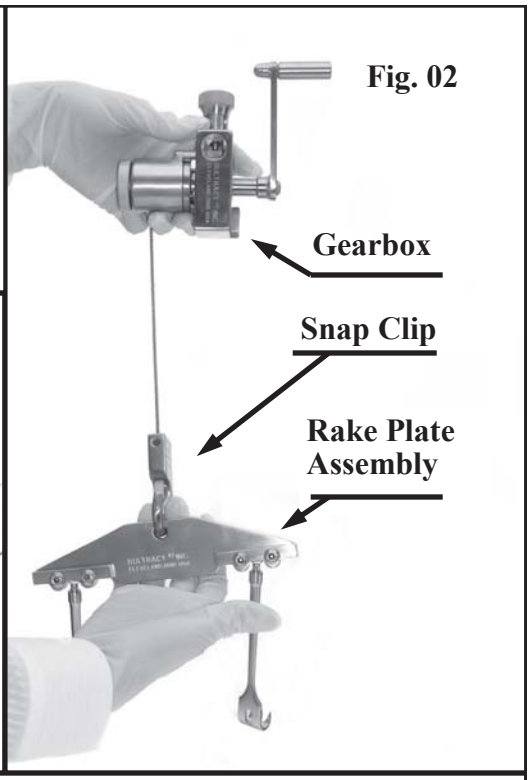

STEP 2 REMOVE SPOOL CAP AND CRANK HANDLE ASSEMBLY:
Holding the Crank Handle Assembly as shown, unscrew and remove the Spool Cap Nut using a counter clockwise rotation (Fig. 03 & 04). Slide Spool Cap Assembly from shaft of Crank Handle Assembly (Fig. 05). Slide Crank Handle Assembly out of Gearbox. At this time, note square of shaft and square hole in Gearbox (Fig. 06).

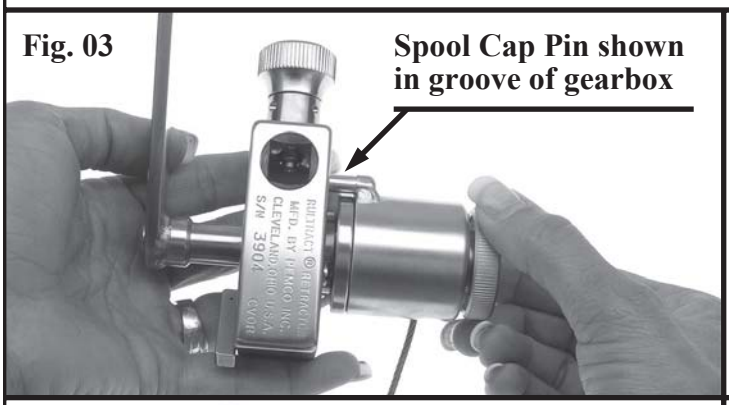

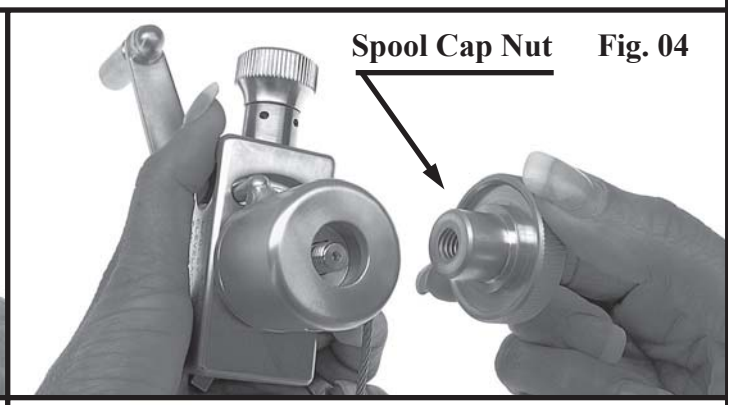

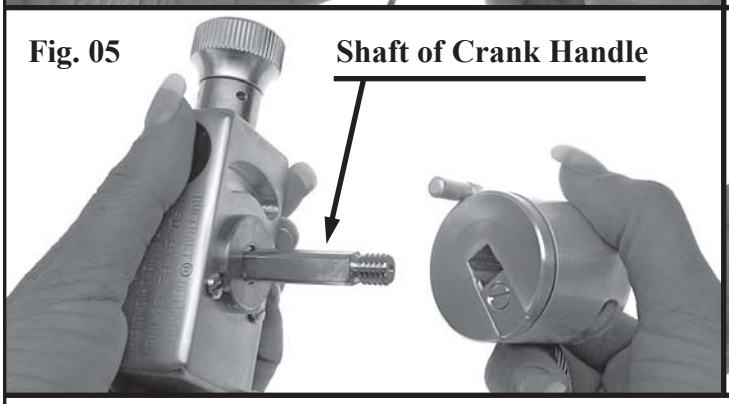

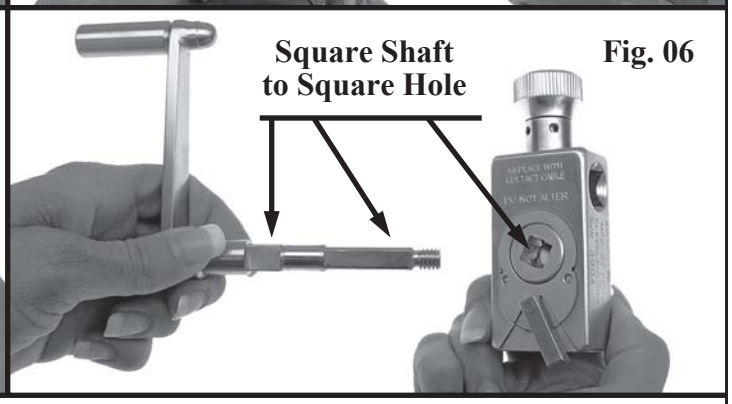

CAUTION: **Always insert spool cap pin into the groove of the gearbox. Failure to do so may result in disassembly or damage to the unit.**

Rultract Inc. 5663 Brecksville Rd. Cleveland, Ohio 44131 U.S.A.
Email: rultract@rultract.com Website: www.rultract.com

STEP 3 REMOVE CABLE FROM PIVOT HUB OR SNAP CLIP:
With Cable completely unwound, hold Pivot Hub or Snap Clip in one hand. Insert 1/8" allen wrench (supplied with cable replacement pack) into Cable Set Screw (Fig. 07 or 08). Loosen a minimum of two full turns. It is not necessary to completely remove set screw. To remove Cable, hold the Spool Cap Assembly in one hand and pull on hub (Fig. 09). Note: Set Screw has created an upset in the existing cable (Fig. 10).

WARNING: Always wear eye protection when removing cable.

Fig. 07

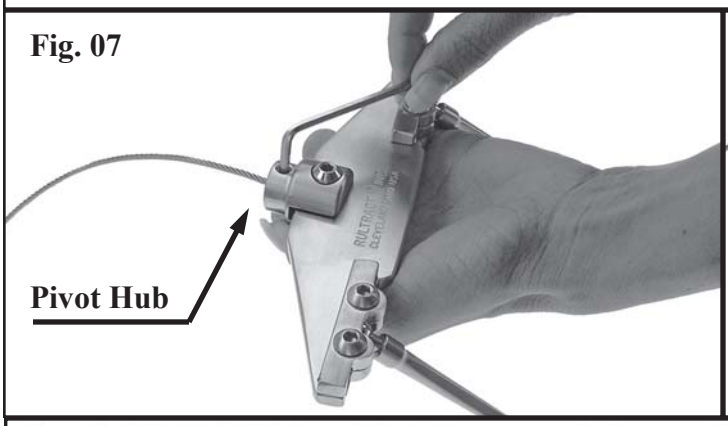

Fig. 08

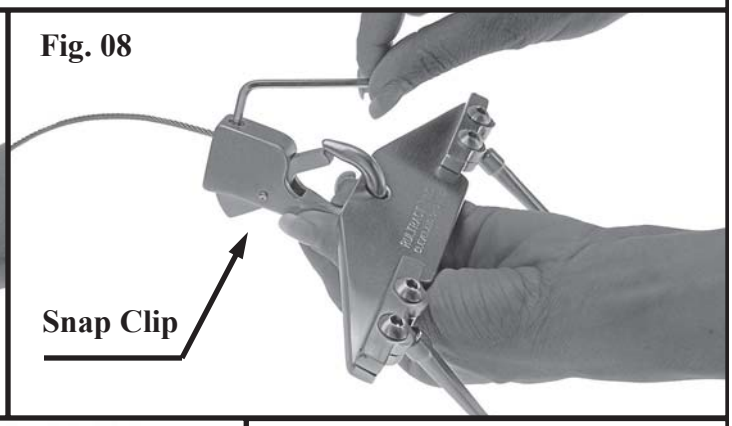

Fig. 09 **PULL TO REMOVE**

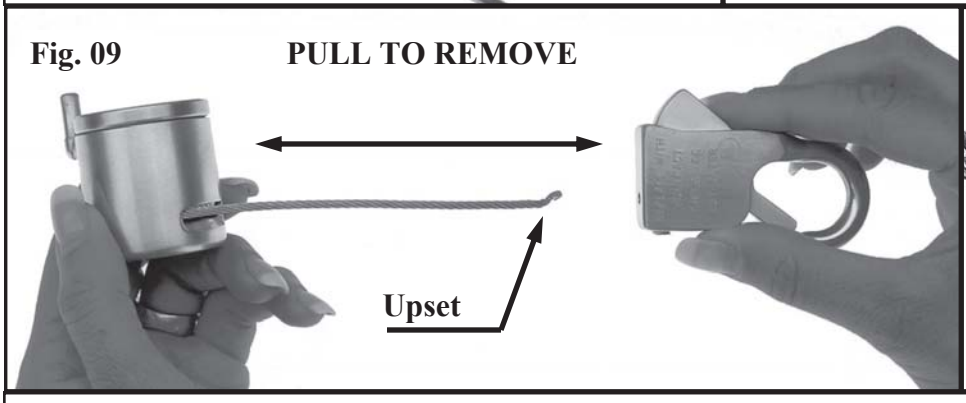

Fig. 10 **Upset**

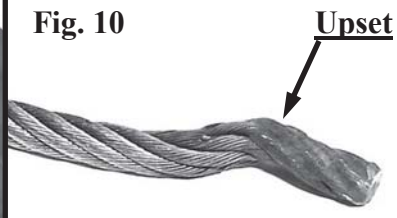

Existing Cable Upset

STEP 4 SEPARATE SPOOL CAP AND TAKE UP SPOOL:
Pull Cable completely through the Spool Cap cable guide (Fig. 11). At this time note the flat surface of the Spool.

Fig. 11

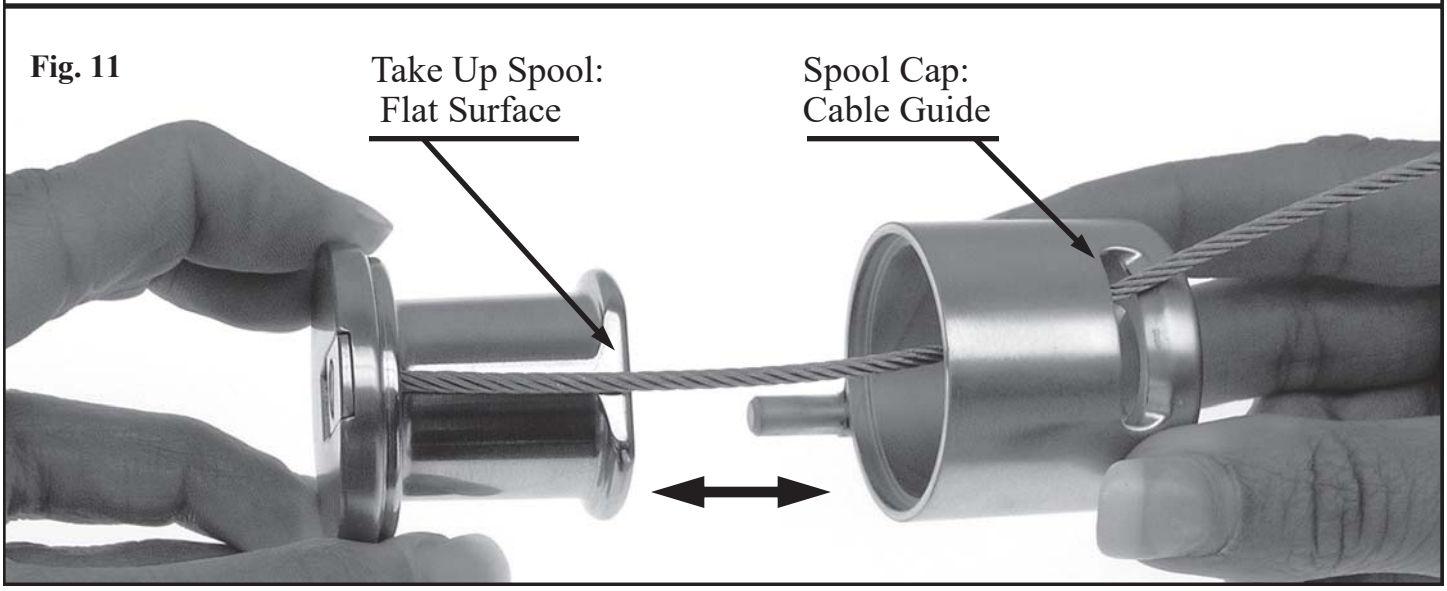

Rultract Inc. 5663 Brecksville Rd. Cleveland, Ohio 44131 U.S.A.
Email: rultract@rultract.com Website: www.rultract.com

STEP 5 REMOVE CABLE FROM SPOOL:
While holding the Spool, remove the Cable Access Plate Screw and Cable Access Plate (Fig. 12). Note: Orientation of Cable Access Plate and screw, flush with all surfaces. Cable Bushing is seated in Spool (Fig. 13). Pull Cable through the hole (Fig. 14).

Cable Access Screw and Plate

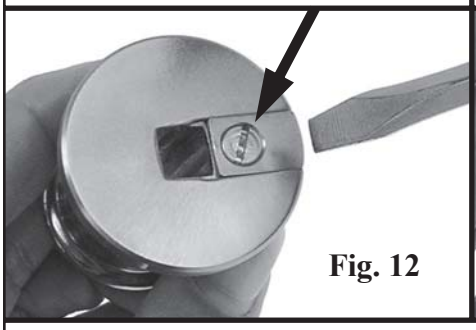

Fig. 12

Cable bushing seated in Spool

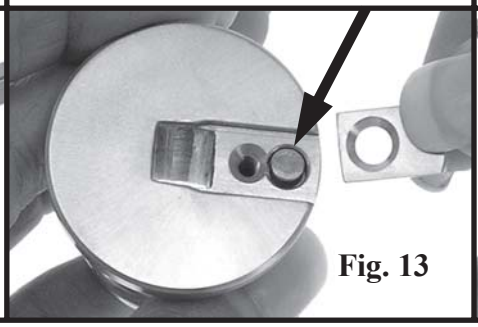

Fig. 13

Direction of pull

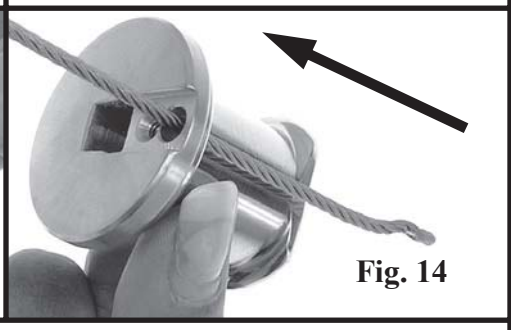

Fig. 14

STEP 6 INSTALL CABLE:
Insert tip of a **new Rultract® cable** through the same hole (Fig. 15). Assure the Cable Bushing is properly seated. Replace the Cable Access Plate (**recess side up**) and loosely insert Cable Access Plate Screw. Push outer edge of Cable Access Plate inward when tightening screw (Fig. 16). This will assure the edge of the Cable Access Plate is flush with the edge of the Spool. Note: After Cable Access Plate is tightened, cable must spin freely (Fig. 17).

Fig. 15

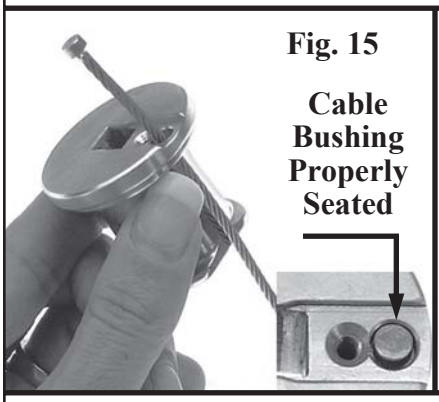

Fig. 16

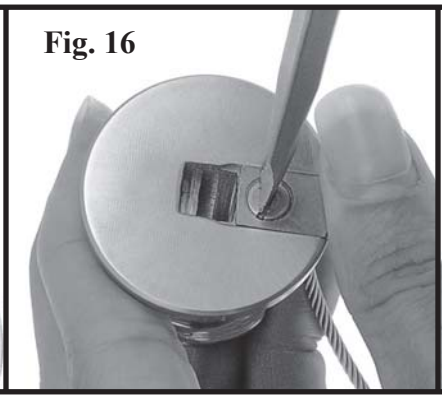

Cable must spin freely **Fig. 17**

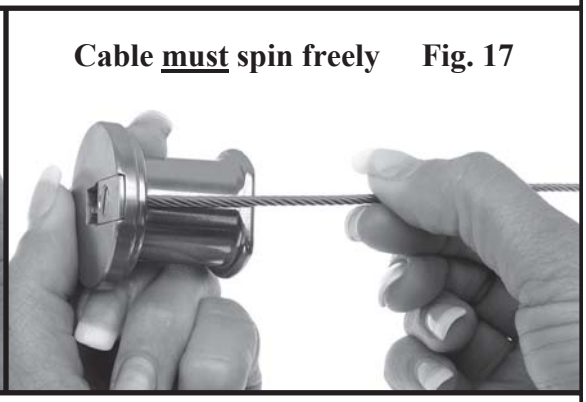

STEP 7 REASSEMBLE SPOOL CAP AND SPOOL:
Insert **new Rultract® Cable** into largest opening of Spool Cap and through the Cable Guide (Fig. 18). Align the Cable Guide with the flat surface of the Spool and slide the two pieces together (Fig. 19).

Fig. 18

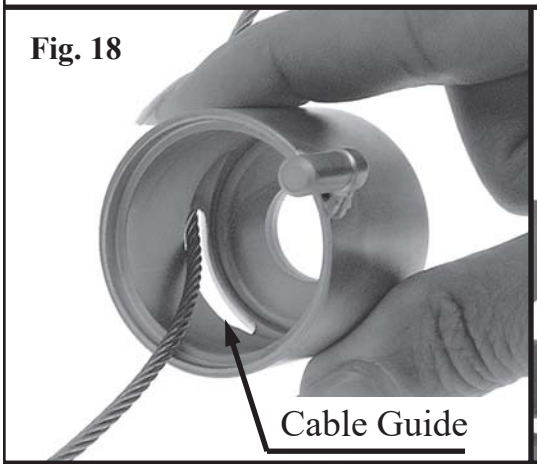

Fig. 19

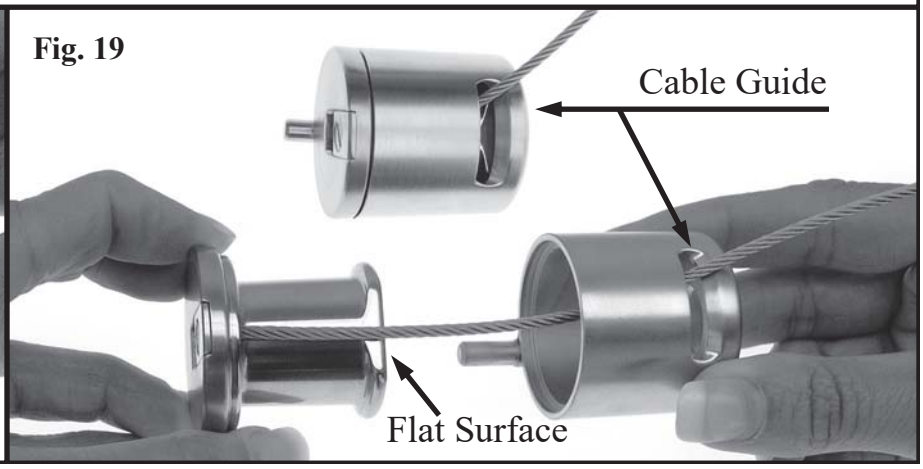

STEP 8 INSTALL CRANK HANDLE ASSEMBLY, SPOOL CAP AND SPOOL CAP NUT:

Slide the shaft of the Crank Handle Assembly into Gearbox by inserting the squared end into the square hole located above the Ratchet Lever (Fig. 20). Note: Both squared sections of the shaft must be completely inserted and flush. While holding the Gearbox and Crank Handle together, line up Spool Cap Pin with the groove in the Gearbox. Slide the Spool Cap Assembly onto the shaft (Fig. 21). Spool Cap Pin must be inserted into groove of Gearbox. While holding Crank Handle Assembly and Gearbox firmly, screw the Spool Cap Nut onto the shaft by turning clockwise.
Hand tighten securely (Fig. 22).

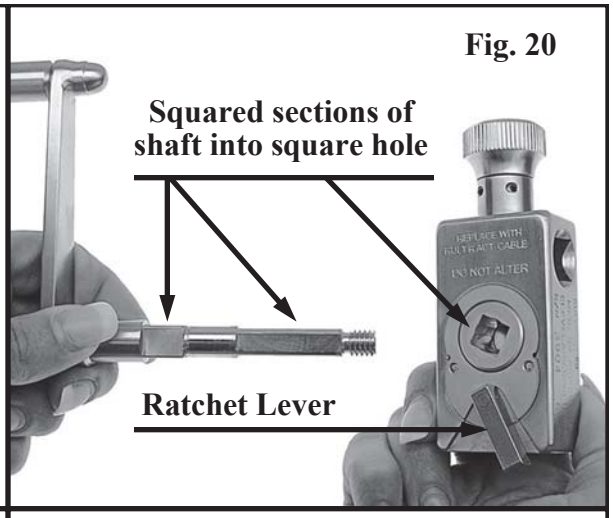

Fig. 20

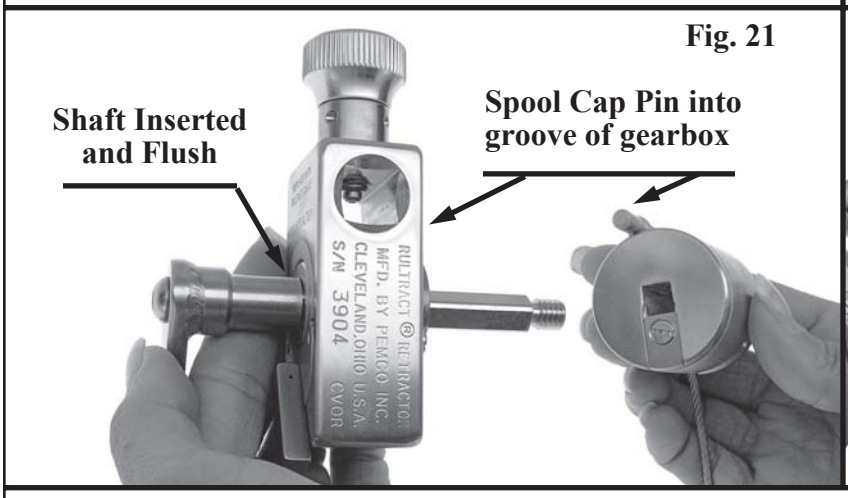

Fig. 21

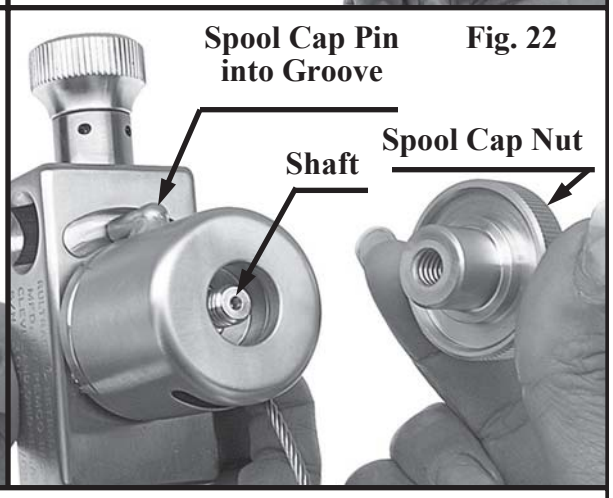

Fig. 22

STEP 9 CABLE INSERTION INTO SNAP CLIP OR PIVOT HUB:

Insert the **new Rultract® cable** completely into the hole until it stops, approximately 1/2" deep. **Make sure set screw is not blocking cable (Fig 23).** Proper tightening of the cable will require some force to compress the cable. Holding the rake plate securely will give the correct amount of leverage. Turn set screw until it makes contact with the cable. **Note** position of allen wrench and tighten set screw 1 to 1 1/2 turns (Fig. 24). Proper tightening of the set screw creates an **upset,** which properly retains the cable. Once the set screw has been tightened do not reposition cable.

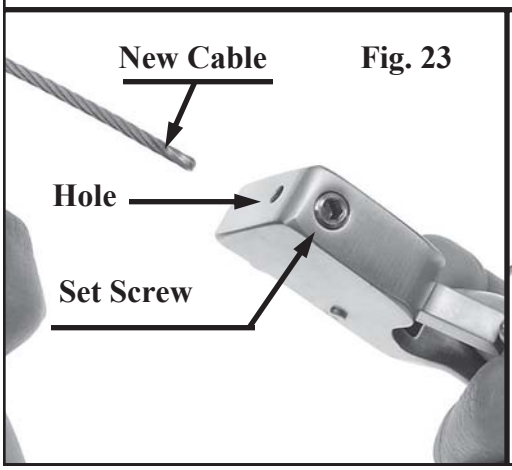

Fig. 23

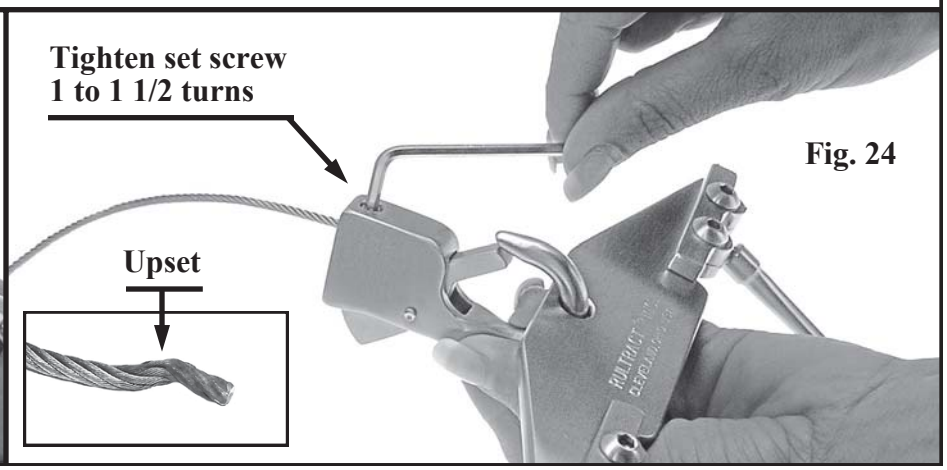

Fig. 24

STEP 11 TEST WINDING FUNCTION:
Allow Rake Plate or Snap Clip to hang freely. Weight of Rake Plate or Snap Clip allows for proper alignment of Cable on Spool. Total length of exposed, unwound Cable is approximately 18 inches (Fig. 25). Note: Leave one to two inches of Cable exposed to prevent flexing of Cable on Cable Guide at insertion site (Fig. 26). This position protects the Cable from kinking and allows gas or steam to penetrate during sterilization.

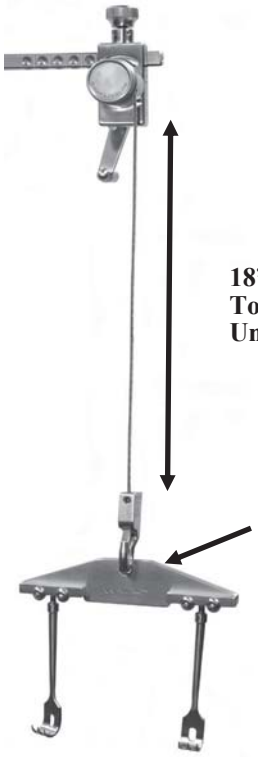

Fig. 25

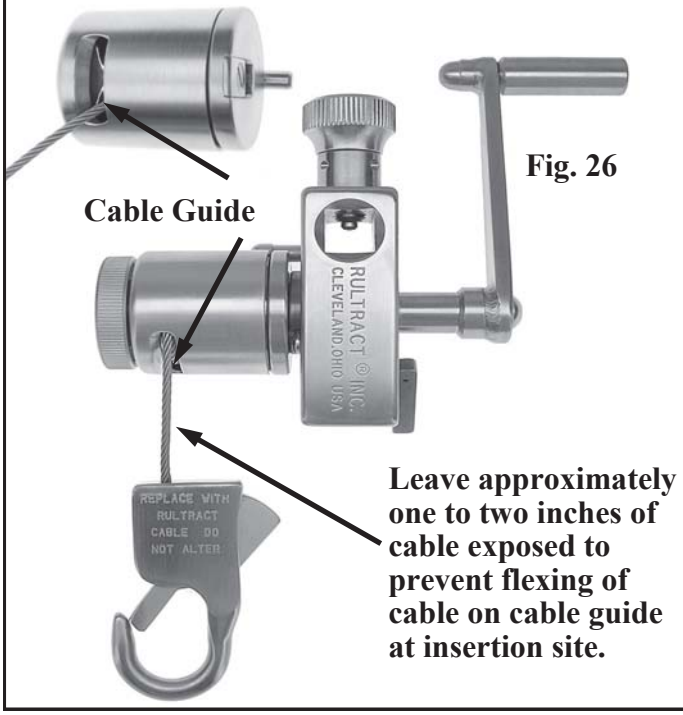

Fig. 26

The Rultract Cable Replacement is now complete

HANDLING OF RULTRACT® RETRACTOR CABLE

WARNING: Cables worn or damaged through mishandling ***prior to the factory service interval***, must be replaced with a **new Rultract® cable**. Do not attempt to repair, cut, alter or modify the cable in any way. **Cutting and reattaching the cable will cause it to weaken and fray. This can result in failure during use and can lead to serious injury or death.**

CAUTION:

****Always allow rake plate to hang freely when winding Cable.** The weight of Rake Plate allows for proper alignment of Cable on Spool. Failure to allow the Rake Plate to hang freely may cause the Cable to kink during winding. Leave approximately one to two inches of Cable exposed to prevent flexing of Cable on Cable Guide at insertion site.

CAUTION:

Always insert spool cap pin into the groove of the gearbox. Failure to do so may result in disassembly or damage to the unit.

REPLACEMENT PARTS

4100P-12 Large Allen Wrench - 5/32"
4100P-13 Small Allen Wrench - 1/8"
4100-20P Cable Replacement Pack, 3 each (Allen wrench included)

NOTE:
ALL REPLACEMENT CABLES ARE 20" LONG.
INSTALLED AND UNWOUND THE EXPOSED CABLE IS 18" LONG.

4100P-12
Large Allen Wrench
One per pack

4100P-13
Small Allen Wrench
One per pack

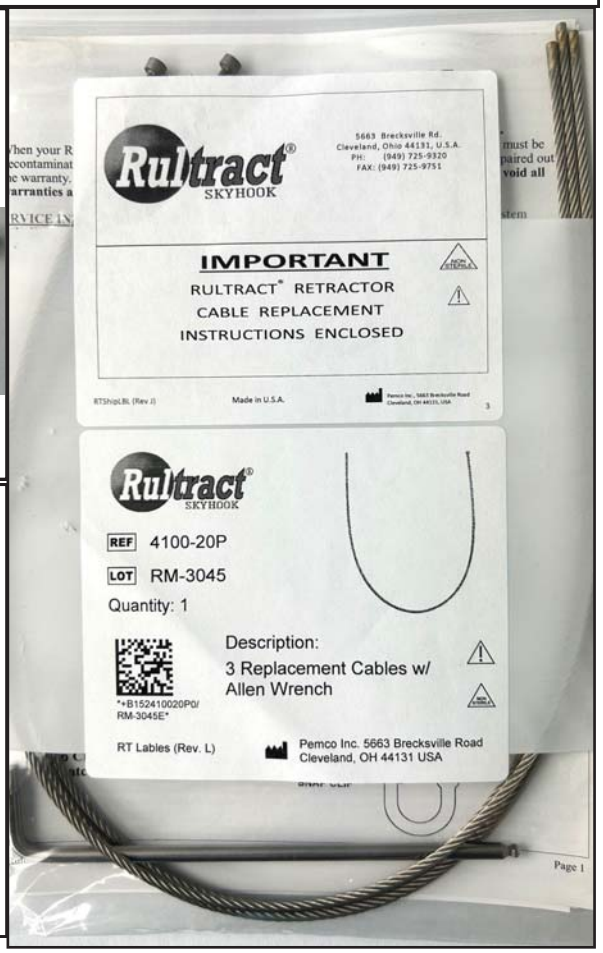

REPLACEMENT PARTS

4100-341P Snap Clip Pack

Includes:

(1) Snap Clip
(1) Rultract Cable
(1) Large Allen Wrench - 5/32"
(1) Small Allen Wrench - 1/8"

NOTE:
ALL REPLACEMENT CABLES ARE 20" LONG. INSTALLED AND UNWOUND THE EXPOSED CABLE IS 18" LONG.

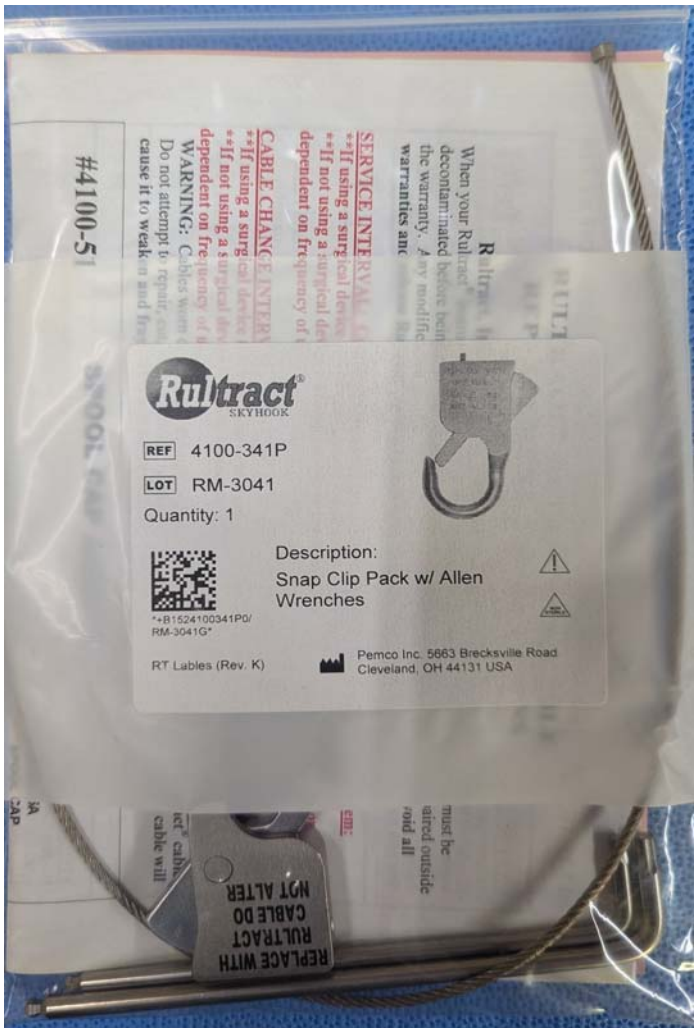

CONTACT INFORMATION

Rultract Inc. 5663 Brecksville Rd. Cleveland, Ohio 44131 U.S.A.
Website: www.rultract.com Email: rultract@rultract.com
Phone: 888-550-5695

Rultract, Inc. is the ONLY authorized service center in the U.S.A.

When your Rultract® instrument needs repair or service, contact Rultract Inc. or Rultract® distributor for the location of an authorized service center. All instruments must be decontaminated before being returned for service. Proof of decontamination must be included with device being returned for service. See the website for the Rultract Service Request Form. Repair charges will apply to instruments repaired outside the warranty.

Use only Rultract OEM parts and service as provided at the factory authorized Rultract OEM service center. The use of any other replacement parts is potentially dangerous, could put the hospital, operating room staff and patient at risk, and can lead to serious injury or death.

USING OUTSIDE SERVICE VENDORS TO SERVICE/REPAIR YOUR RULTRACT RETRACTOR:
Rultract is the only authorized service center for the Rultract Retractor System. Outside service vendors are not authorized to service or repair the Rultract Retractor System and do not have access to all Rultract OEM replacement parts. Using outside service vendors to service/repair your Rultract retractor system is potentially dangerous, could put the hospital, operating room staff and patient at risk, and can lead to serious injury or death.

SERVICE INTERVAL: Complete factory service of your Rultract Skyhook Retractor System: (including a cable change)

****If using a surgical device tracking system to track cases, i.e. Censitrac: 400 cases.**

****If not using a surgical device tracking system to track cases, i.e. Censitrac: Every 12-24 months dependent on frequency of use.**

WARNING: Cables worn or damaged through mishandling *prior to the factory service interval*, must be replaced with a new Rultract® cable. Do not attempt to repair, cut, alter or modify the cable in any way. Cutting and reattaching the cable will cause it to weaken and fray. This can result in failure during use and can lead to serious injury or death.

REPLACEMENT: Rultract Ratchet Assemblies and Rake Plate Assemblies purchased prior to 2000, with no OEM maintenance history or relevant product update history, require replacement.

Rultract FDA Information

FDA Establishment:
RULTRACT INC
5663 Brecksville Road
Independence , OH 44131
Registration #: 1530504
FEI Number*: 3000717741
Owner Operator # 10060024

Rultract® SKYHOOK
Simplicity Exchange Service Program
-service made simple-

RULTRACT WARNINGS INDEX:

Standards of Safe Use Compliance

PROPER SERVICING AND REPAIR OF YOUR RULTRACT RETRACTOR SYSTEM

Rultract, Inc. is the ONLY authorized service center in the U.S.A. Contact Rultract at service@rultract.com or 888-550-5695 to schedule service/repair or with questions concerning routine maintenance and service.

SERVICE INTERVAL: Complete factory service of your Rultract Skyhook Retractor System: (including a cable change)

****If using a surgical device tracking system to track cases, i.e. Censitrac: 400 cases.**

****If not using a surgical device tracking system to track cases, i.e. Censitrac: Every 12-24 months dependent on frequency of use.**

WARNING: Cables worn or damaged through mishandling ***prior to the factory service interval***, must be replaced with a **new Rultract® cable**. Do not attempt to repair, cut, alter or modify the cable in any way. **Cutting and reattaching the cable will cause it to weaken and fray. This can result in failure during use and can lead to serious injury or death.**

Use only Rultract OEM parts and service as provided at the factory authorized Rultract OEM service center. The use of any other replacement parts is potentially dangerous, could put the hospital, operating room staff and patient at risk, and can lead to serious injury or death.

USING OUTSIDE SERVICE VENDORS TO SERVICE/REPAIR YOUR RULTRACT RETRACTOR:
Rultract is the only authorized service center for the Rultract Retractor System. Outside service vendors are not authorized to service or repair the Rultract Retractor System and do not have access to all Rultract OEM replacement parts. Using outside service vendors to service/repair your Rultract retractor system is potentially dangerous, could put the hospital, operating room staff and patient at risk, and can lead to serious injury or death.

REPLACEMENT: REAS: Exceeded Useful Lifespan
Rultract Ratchet Assemblies and Rake Plate Assemblies purchased prior to 2000, with no OEM maintenance history or relevant product update history, require replacement.

WARNING:
Any modification or alteration to a Rultract® product by user is dangerous, could put the hospital, operating room staff and patient at risk, and can lead to serious injury or death. This action will also will void all warranties and release Rultract® from any liability.

HANDLING OF RULTRACT® RETRACTOR
The Rultract Retractor System uses An OEM specific cable which holds the Snap Clip and Rake Plate. If the proper OEM pieces are not used and the pieces are not serviced in regular intervals by a factory trained technician, they could separate during surgery possibly causing serious injury or death.

CAUTION:
**** Always allow rake plate to hang freely when winding Cable (pages 25 & 33).** The weight of Rake Plate allows for proper alignment of Cable on Spool. Failure to allow the Rake Plate to hang freely may cause the Cable to kink during winding. Leave approximately one to two inches of Cable exposed to prevent flexing of Cable on Cable Guide at insertion site.

CAUTION:
Always insert spool cap pin into the groove of the gearbox (pages 24 & 32). Failure to do so may result in disassembly or damage to the unit.

Rultract SKYHOOK Surgical Retractor Systems™

SERVICE REQUEST FORM

Please complete this form and send with items for service/repair to

5663 Brecksville Road, Cleveland, OH 44131

Items sent for repair will NOT be serviced without documentation of proper decontamination and cleaning. Complete the verification of decontamination section below to ensure service begins.

- Upon receipt and inspection, a service representative will contact you with a quote
- Please check one box here if you would like RUSH service: RUSH ☐ $95.00 SUPER RUSH ☐ $165.00

Item(s) Description **Quantity**

_____ _____

_____ _____

_____ _____

Description of Service Requested

_____

_____

Sterilization Status: (Must be verified for service/repair to be completed)

☐ The enclosed medical device(s) **have** been thoroughly cleaned/brushed and decontaminated in autoclave Equipment according to the manufacturer's instructions.

☐ **RETURNED / UNUSED EQUIPMENT ONLY**: The enclosed medical device(s) **have NEVER** been in contact with blood, tissue, body substances or other body fluids and thus is hygienically safe.

** Complete the information below & include this form in the box with equipment to be repaired.

Customer/Company Name and Billing Address **Shipping Address (if different)**

_____ _____

_____ _____

_____ _____

_____ _____ _____

Signature Date Phone (____Mobile **OR** ____FAX)

_____ _____

Print Name Title

_____

Email

PURCHASE ORDER # (if applicable): _____

Rultract Service Questions? Call 888-550-5695 *Form 6.4.2.2 Rev. D*

DO NOT REMOVE PAGE

Rultract® Skyhook Retractor Available Parts List

Part #	Part Description
4100-IMR-41	Ratchet Assembly with Snap Clip
4100-02	Rake Plate Clamp
4100-341P	Snap Clip Pack w/ Cable
4100-03A	Cable Set Screw
4100-04	Ratchet Shaft
4100-06A	Take Up Spool
4100-07B	Gearbox
4100-11	Crank Arm
4100-12	Sternal Rake, Sharp Tip (sold only as 2 each)
4100-12D	Sternal Rake, Dull Tip (sold only as 2 each)
4100-12R	Sternal Ring Rake, Sharp Tip (special order)
4100-12RD	Sternal Ring Rake, Dull Tip (special order)
4100-15	Spool Cap Nut
4100-15A	Spool Cap
4100-17	Crank Handle Sleeve
4100-18	Crank Handle Screw
4100-19	Cable Access Plate
4100-20	Cable
4100-20SP	Cable Replacement Single Pack
4100-20P	Cable Replacement 3 Pack
4100-28C	Square Tip Double Bend Bottom Post
4100-28CP	Square Tip Offset Bottom Post
4100-28CS-02	Spline Tip Single Bend Bottom Post
4100-32A	Square Top Post, Standard Length
4100-32AL	Square Top Post, Extended Length (special order)
4100-32ALS	Spline Top Post, Extended Length (special order)
4100-32AP	Square Offset Top Post
4100-32AS-02	Spline Top Post, Single Bend
4100-32AST	Spline Tilting Top Post (special order)
4100-32AT	Square Tilting Top Post (special order)
4100-32ST-06A	Knob Assembly
4100-33P	Rake Clamp Screw Pack
4100-39R	Riser Extender Bar with Cross Square
4100-39S	Extender Bar with Cross Square
4100-39TS	Rotating Extender Bar with Cross Square
4100-39TS-07A	Knob Assembly
4100-50	Gearbox Assembly
4100-51	Spool Cap Assembly
4100-52	Sternal Rake Plate Assembly, Sharp Tip
4100-52D	Sternal Rake Plate Assembly, Dull Tip
4100-52RDH	Lift Spreader Plate Assembly, Hook
4100-52RDL	Lift Spreader Plate Assembly, Large
4100-52RDM	Lift Spreader Plate Assembly, Medium
4100-52RDS	Lift Spreader Plate Assembly, Small
4100-53	Crank Handle Assembly with Shaft
4100-54	Ratchet Cover Plate Assembly

Part #	Part Description
4100-59-07	Coupler Assembly (special order)
4100-59-07B	Coupler Bar (special order)
4100-59-08	Coupler Assembly (special order)
4100-59-08B	Coupler Bar (special order)
4100-59-11	Coupler Assembly (special order)
4100-59-11B	Coupler Bar (special order)
4100-59-03	Coupler Tube Assembly (special order)
4100-59-39	One Piece Coupler Bar w/ Center Extension
4100-60	Minimally Invasive Rake Set
4100-60A	Minimally Invasive Rake
4100-60B	Minimally Invasive Rake
4100-60C	Minimally Invasive Rake
4100-60D	Minimally Invasive Rake
4100-60AS	Pediatric Rake
4100-60P-01	Pediatric Rake
4100-60P-02	Pediatric Rake
4100-60P-03	Pediatric Rake
4100-60P-04	Pediatric Rake
4100-60P-05	Pediatric Rake
4100-60P-06	Pediatric Rake
4100-70	Xiphoid Rake
4100-71	Xiphoid Rake
4100-72	Xiphoid Rake
4100-73	Xiphoid Rake
4100-74	Xiphoid Rake
4100-75	Xiphoid Rake
4100-77L	Sternal Rake, Large
4100-77M	Sternal Rake, Medium
4100-77S	Sternal Rake, Small
4100P-05	Ratchet Cover Plate Screw
4100P-08	Crank Arm Screw
4100P-11	Cable Access Plate Screw
4100P-12	Large Allen Wrench
4100P-13	Small Allen Wrench
4100P-25	Rotating Extender Bar Spring
4100P-26	Tilting Post Spring
4110	Round Base Combination Clamp
4110-03A	Cross Handle Assembly
4110-04A	Wing Handle Assembly
4110-17	Lower Jaw Assembly
4110P-05	Clamp Spring
4110P-12	Handle Retaining Screw
4110P-14	Combination Clamp Spring (2019 and newer)
4110P-15	Combination Clamp Shoulder Bolt
4110S	Square Base Combination Clamp
4150	Square Tip, Double Bend Post/Clamp, Scrub Applied
4150S-02	Spline Tip, Single Bend Post/Clamp, Scrub Applied
4160	Square Tip, Double Bend Post/Clamp, Circulator Applied
4160-09A	5 Point Handle Assembly 10-TPI
4160-09B	5 Point Handle Assembly 8-TPI
4160S-02	Spline Tip, Single Bend Post/Clamp, Circulator Applied

Rultract Inc. 5663 Brecksville Rd. Cleveland, Ohio 44131 U.S.A.
Email: rultract@rultract.com Website: www.rultract.com

PROPER SERVICING AND REPAIR OF YOUR RULTRACT RETRACTOR SYSTEM

WARNING: -

USING OUTSIDE SERVICE VENDORS TO SERVICE/REPAIR YOUR RULTRACT RETRACTOR SYSTEM:

USING OUTSIDE SERVICE VENDORS TO SERVICE/REPAIR YOUR RULTRACT RETRACTOR:

Rultract is the only authorized service center for the Rultract Retractor System. Outside service vendors are not authorized to service or repair the Rultract Retractor System and do not have access to all Rultract OEM replacement parts.

Use only Rultract OEM parts and service as provided at the factory authorized Rultract OEM service center. The use of any other replacement parts is potentially dangerous, could put the hospital, operating room staff and patient at risk, and can lead to serious injury or death.

Using outside service vendors to service/repair your Rultract retractor system is potentially dangerous, could put the hospital, operating room staff and patient at risk, and can lead to serious injury or death.

HANDLING OF RULTRACT® RETRACTOR CABLE

The Rultract Retractor System uses a specific cable which holds the Snap Clip and Rake Plate. If the proper OEM pieces are not used and the pieces are not serviced in regular intervals by a factory trained technician, they could separate during surgery potentially causing serious injury or death.

CAUTION:

****Always allow rake plate to hang freely when winding Cable.** The weight of Rake Plate allows for proper alignment of Cable on Spool. Failure to allow the Rake Plate to hang freely may cause the Cable to kink during winding. Leave approximately one to two inches of Cable exposed to prevent flexing of Cable on Cable Guide at insertion site.

CAUTION:

Always insert spool cap pin into the groove of the gearbox. Failure to do so may result in disassembly or damage to the unit.

Contact Rultract at service@rultract.com or 888-550-5695 to schedule service/repair or with questions concerning routine maintenance and service.

Rultract FDA Information
FDA Establishment:
RULTRACT INC
5663 Brecksville Road
Independence , OH 44131
Registration #: 1530504
FEI Number*: 3000717741
Owner Operator # 10060024
Listing # D345513

Rultract® SKYHOOK Surgical Retractor Systems

Rultract FDA Information
FDA Establishment:
RULTRACT INC
5663 Brecksville Road
Independence , OH 44131
Registration #: 1530504
FEI Number*: 3000717741
Owner Operator # 10060024
Listing # D345513

Rultract® SKYHOOK

Simplicity Exchange Service Program
-service made simple-